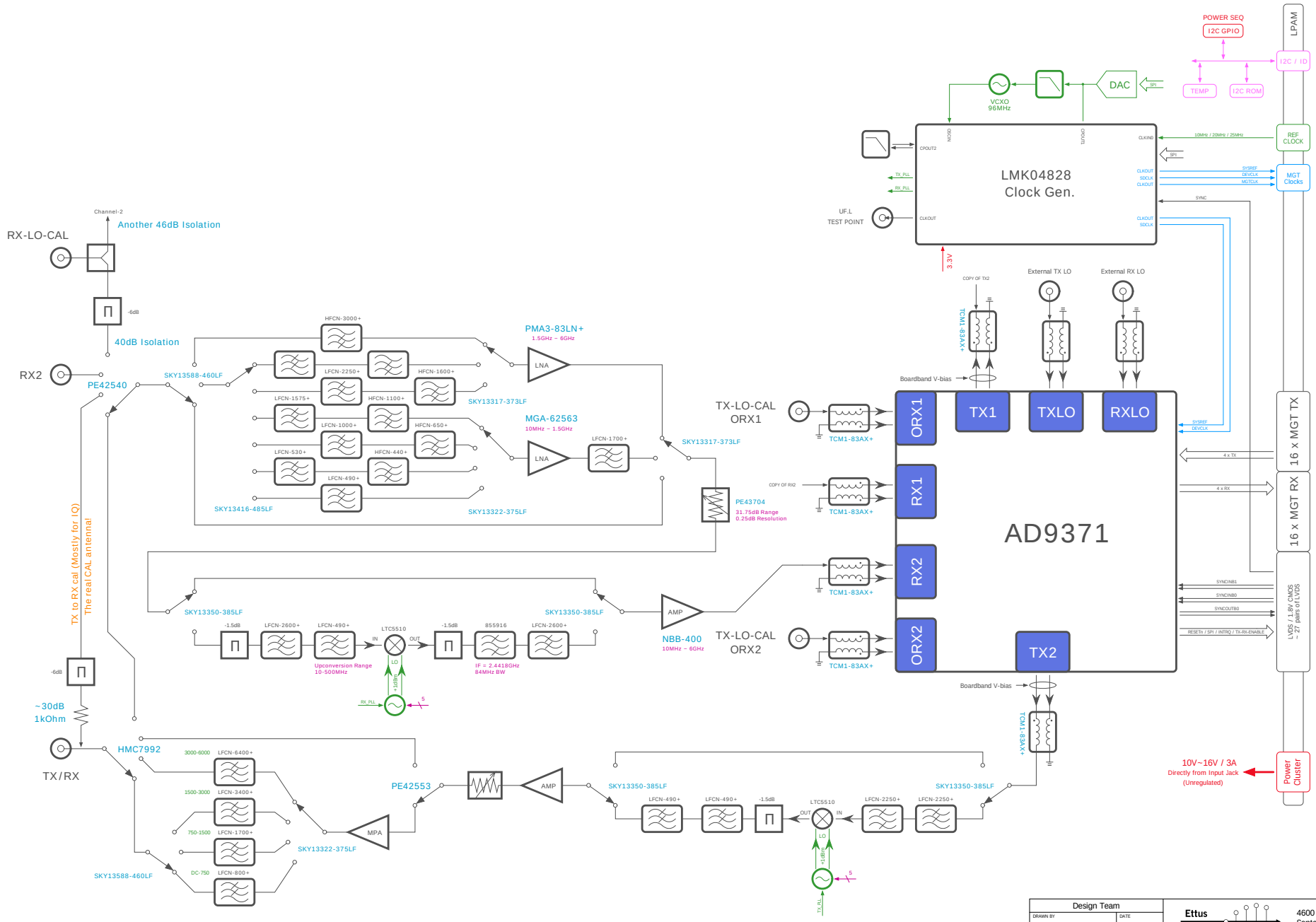
Revisions
REV
Description
POWER SEQ
I2C GPIO
LPAM
I2C / ID
TEMP
I2C ROM
DAC
SPI
VCXO
96MHz
REF CLOCK
10MHz / 20MHz / 25MHz
LMK04828
Clock Gen.
CPOUT2
CPOUT1
CLKIN0
CLKIN1
CLKOUT
SDCLK
SYSREF
DEVCLK
MGTCLK
MGT Clocks
SYNC
TX_PLL
RX_PLL
UF.L
TEST POINT
3.3V
Channel-2
Another 46dB Isolation
RX-LO-CAL
-6dB
40dB Isolation
RX2
PE42540
SKY13588-460LF
HFCN-3000+
LFCN-2250+
HFCN-1600+
LFCN-1575+
HFCN-1100+
LFCN-1000+
HFCN-650+
LFCN-530+
HFCN-440+
LFCN-490+
SKY13416-485LF
SKY13322-375LF
SKY13317-373LF
PMA3-83LN+
1.5GHz ~ 6GHz
LNA
MGA-62563
10MHz ~ 1.5GHz
LFCN-1700+
SKY13317-373LF
PE43704
31.75dB Range
0.25dB Resolution
TX-LO-CAL
ORX1
TX-LO-CAL
ORX2
TCM1-83AX+
COPY OF TX2
COPY OF RX2
External TX LO
External RX LO
Boardband V-bias
ORX1
TX1
TXLO
RXLO
RX1
RX2
ORX2
TX2
AD9371
16 x MGT TX
16 x MGT RX
LVDS / 1.8V CMOS
~ 27 pairs of LVDS
4 x TX
4 x RX
SYNCINB1
SYNCINB0
SYNCOUTB0
RESETn / SPI / INTRQ / TX-RX-ENABLE
TX to RX cal (Mostly for IQ)
The real CAL antennal
SKY13350-385LF
-1.5dB
LFCN-2600+
LFCN-490+
LTC5510
IN
OUT
LO
Upconversion Range
10-500MHz
855916
IF = 2.4418GHz
84MHz BW
AMP
NBB-400
10MHz ~ 6GHz
~30dB
1kOhm
TX/RX
HMC7992
3000-6000
LFCN-6400+
1500-3000
LFCN-3400+
750-1500
LFCN-1700+
DC-750
LFCN-800+
MPA
SKY13322-375LF
SKY13588-460LF
PE42553
LFCN-2250+
10V~16V / 3A
Directly from Input Jack
(Unregulated)
Power Cluster
Design Team
DRAWN BY
DATE
REVISED BY
VERIFIED BY
TECHNICIAN
ENGINEER
Ettus Research
A National Instruments Company
4600 Patrick Henry Drive
Santa Clara, CA 95054
USA
System Block Diagram
SCH, USRP N3X0,DAUGHTERBOARD,AD9371,JESD204B
SIZE
D
DOC CODE
7U296
DRAWING PROJECT NO
141328E-01
REV
2
FILE NAME
01_BlockDiagram.SchDoc
DATE 5/21/2018
SHEET 1 OF 15

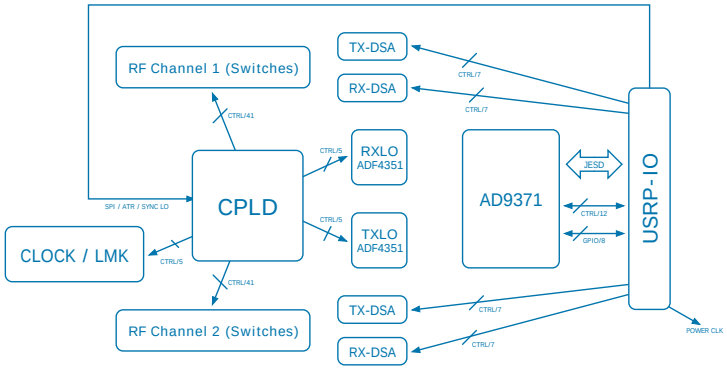

Slow speed digital signals / IOs / power enables

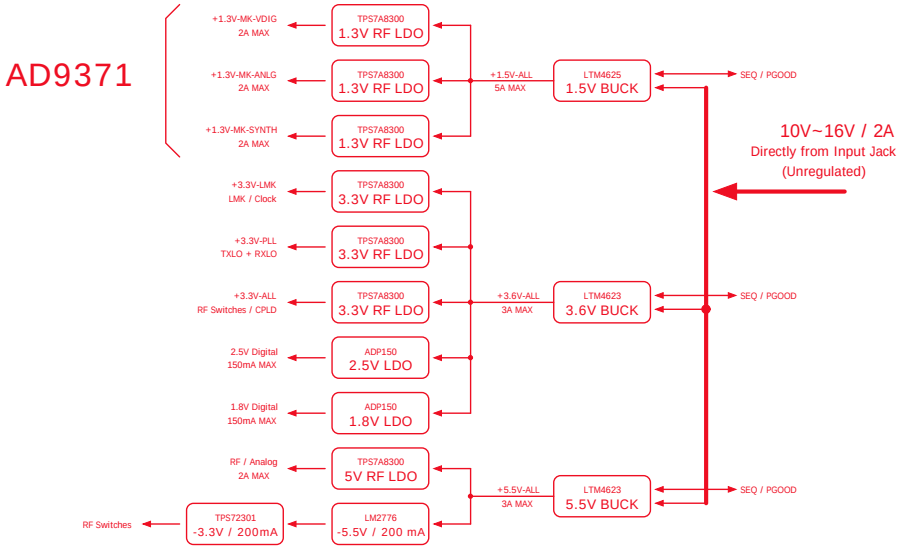

Power management

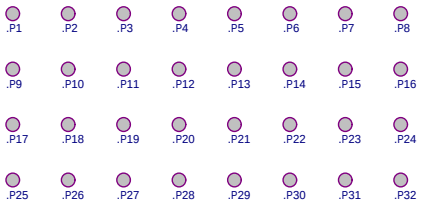

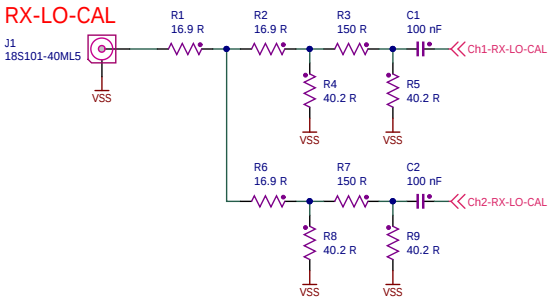

Essential Board Components			
USRP N3X0,DAUGHTERBOARD,AD9371,JESD204B			
SIZE C	DOC CODE 7U296	DRAWING PROJECT NO 141328E-01	REV 2
FILE NAME 02_Essential.SchDoc		DATE 5/21/2018	SHEET 2 OF 15

141328E-01

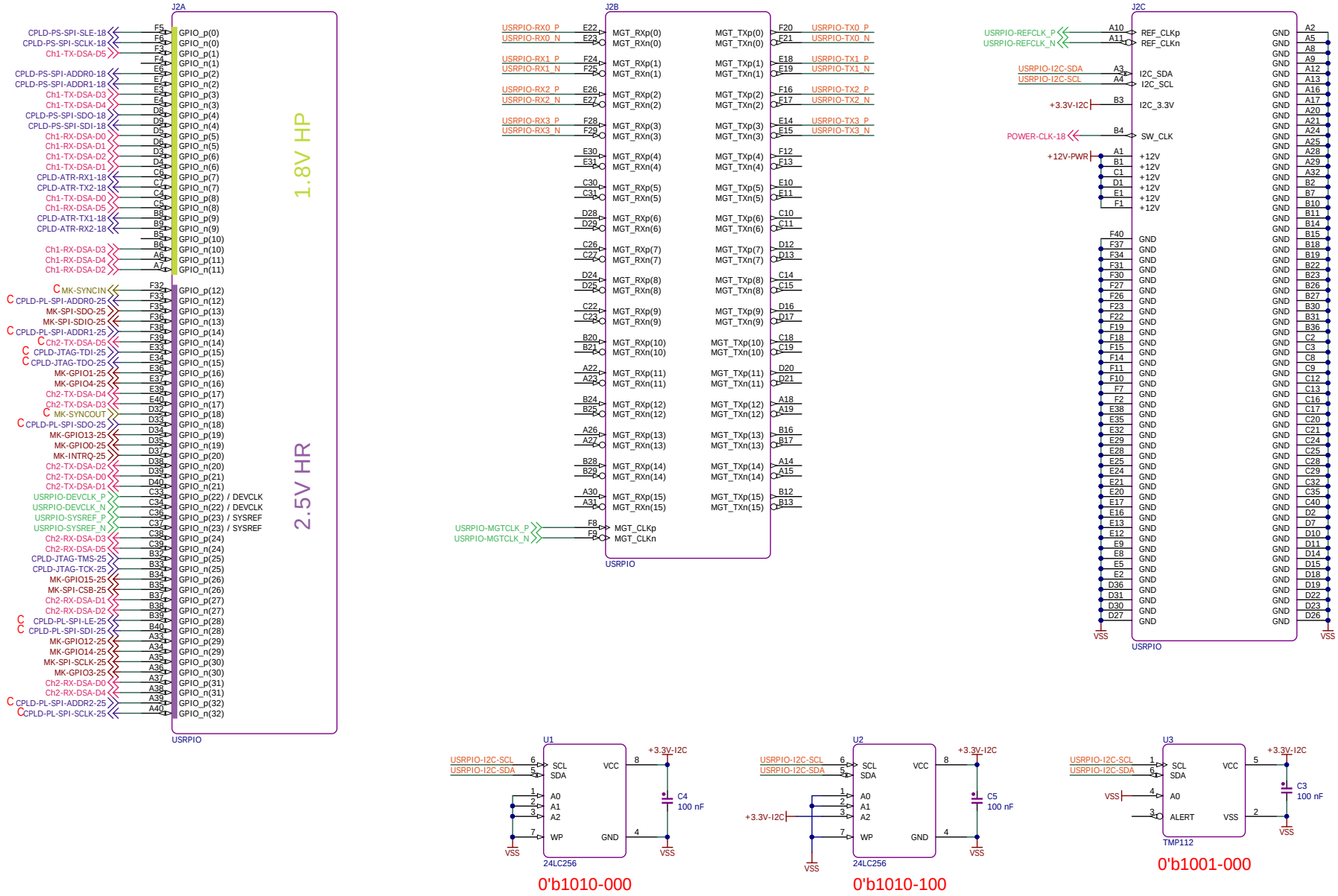

USRP-IO Interface			
USRP N3X0,DAUGHTERBOARD,AD9371,JESD204B			
SIZE C	DOC CODE 7U296	DRAWING PROJECT NO 141328E-01	REV 2
FILE NAME 03_USRPIO.SchDoc		DATE 5/21/2018	SHEET 3 OF 15

141328E-01

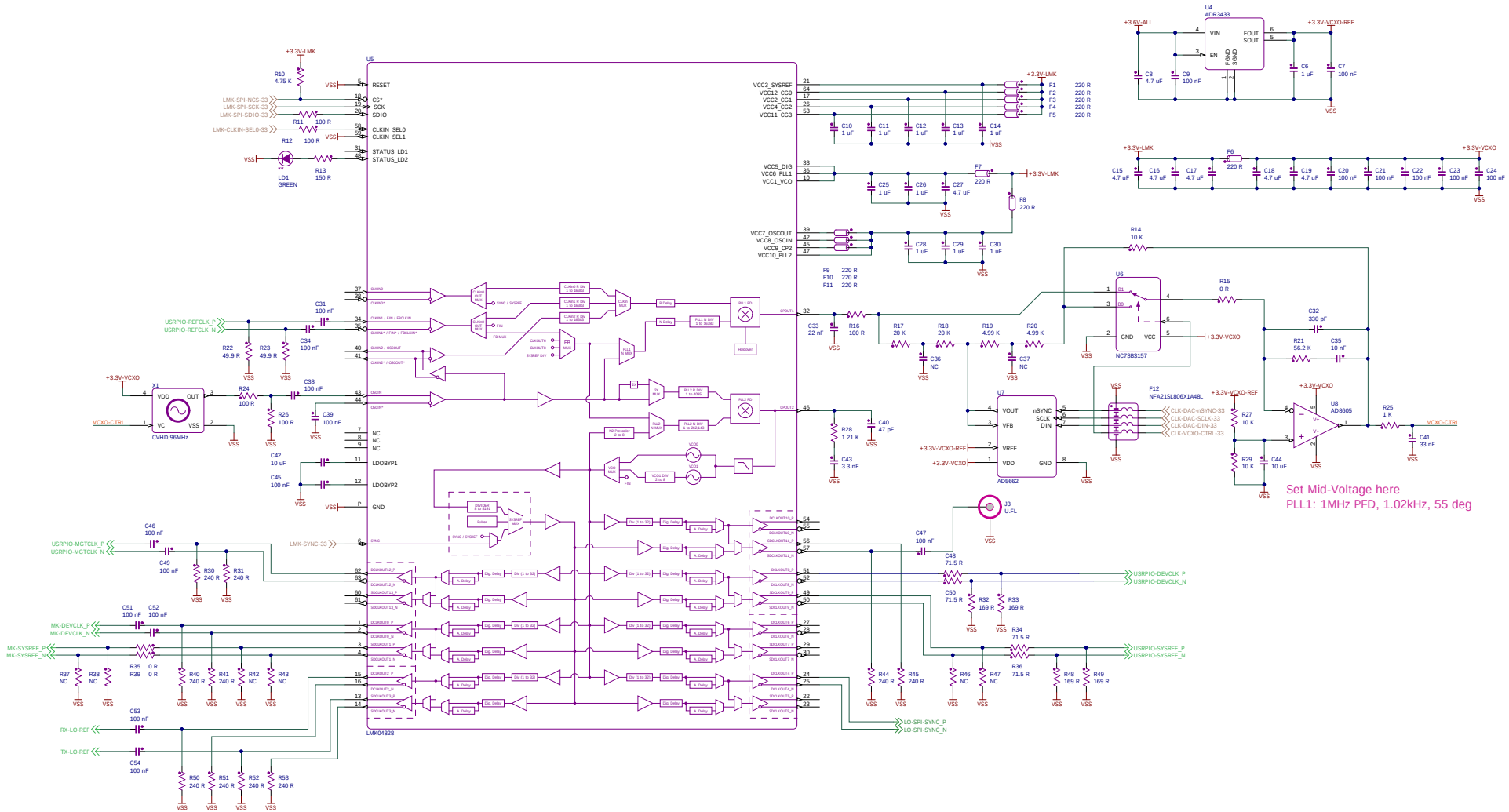

System Timing and Clock			
SCH,USRP N3X0,DAUGHTERBOARD,AD9371,JESD204B			
SIZE D	DOC CODE 7U296	DRAWING PROJECT NO 141328E-01	REV 2
FILE NAME 04_Clock.SchDoc		DATE 5/21/2018	SHEET 4 OF 15

141328E-01

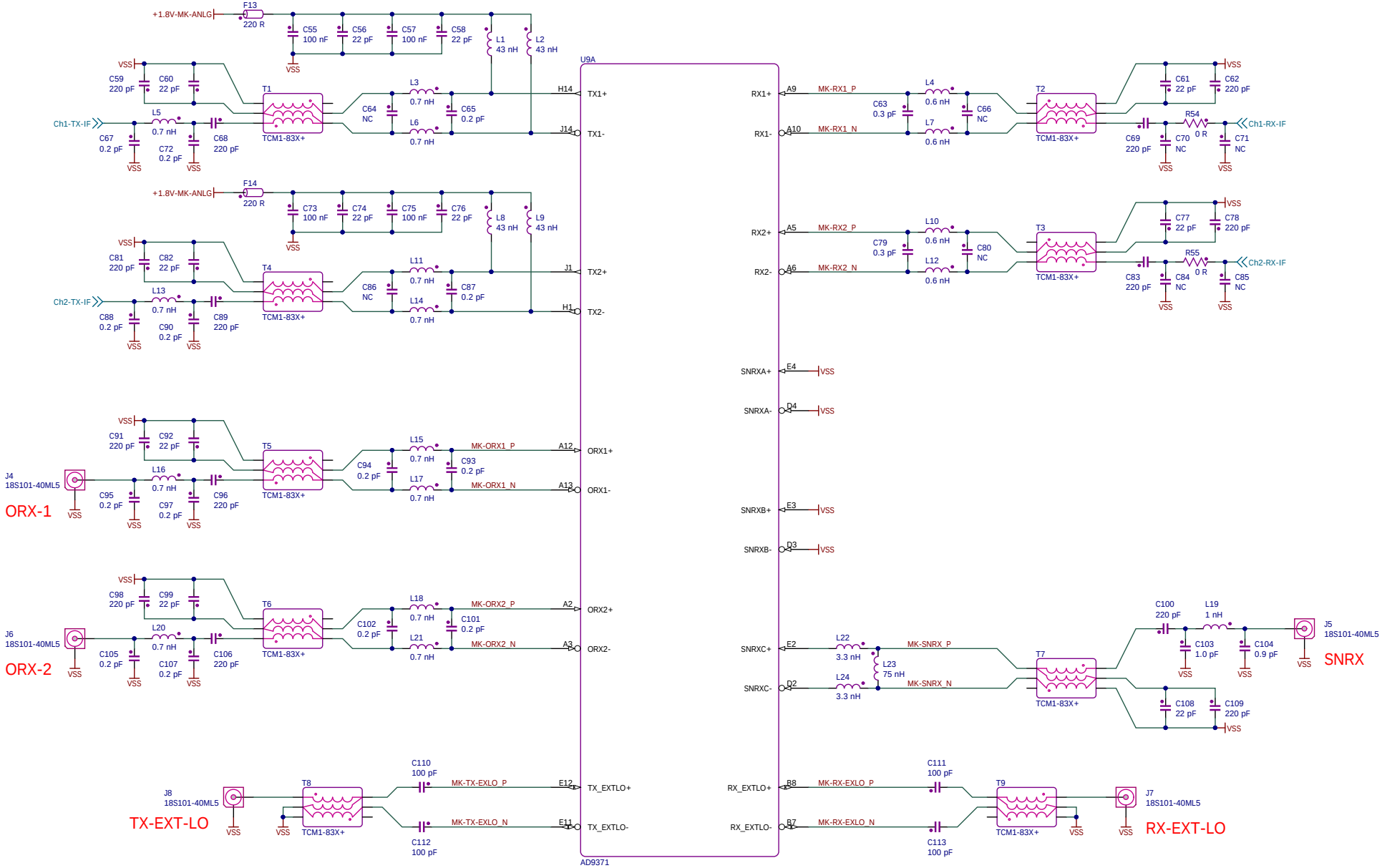

Mykonos RF Part			
USRP N3X0,DAUGHTERBOARD,AD9371,JESD204B			
SIZE C	DOC CODE 7U296	DRAWING PROJECT NO 141328E-01	REV 2
FILE NAME 05_Mykonos_RF.SchDoc		DATE 5/21/2018	SHEET 5 OF 15

141328E-01

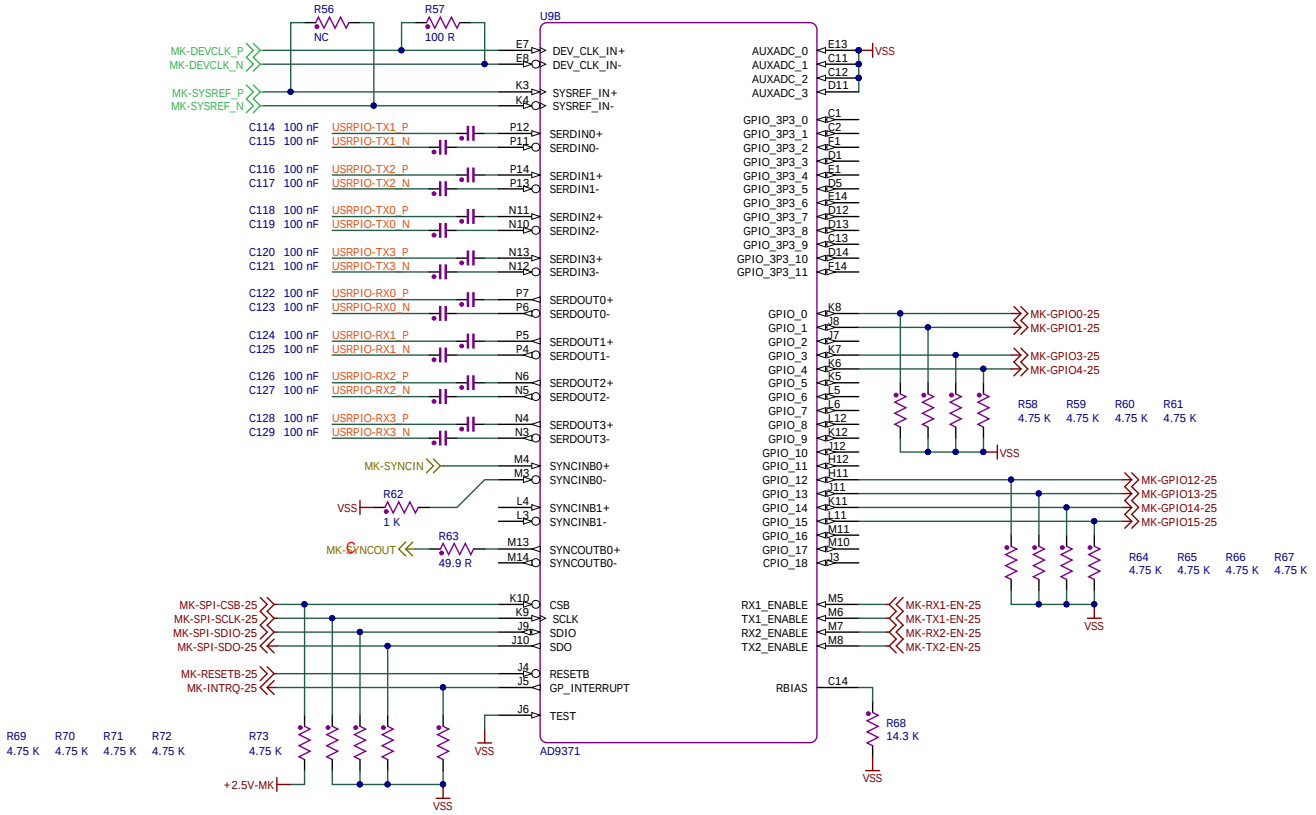

Mykonos IO Part			
USRP N3X0,DAUGHTERBOARD,AD9371,JESD204B			
SIZE C	DOC CODE 7U296	DRAWING PROJECT NO 141328E-01	REV 2
FILE NAME 06_Mykonos_IO.SchDoc		DATE 5/21/2018	SHEET 6 OF 15

141328E-01

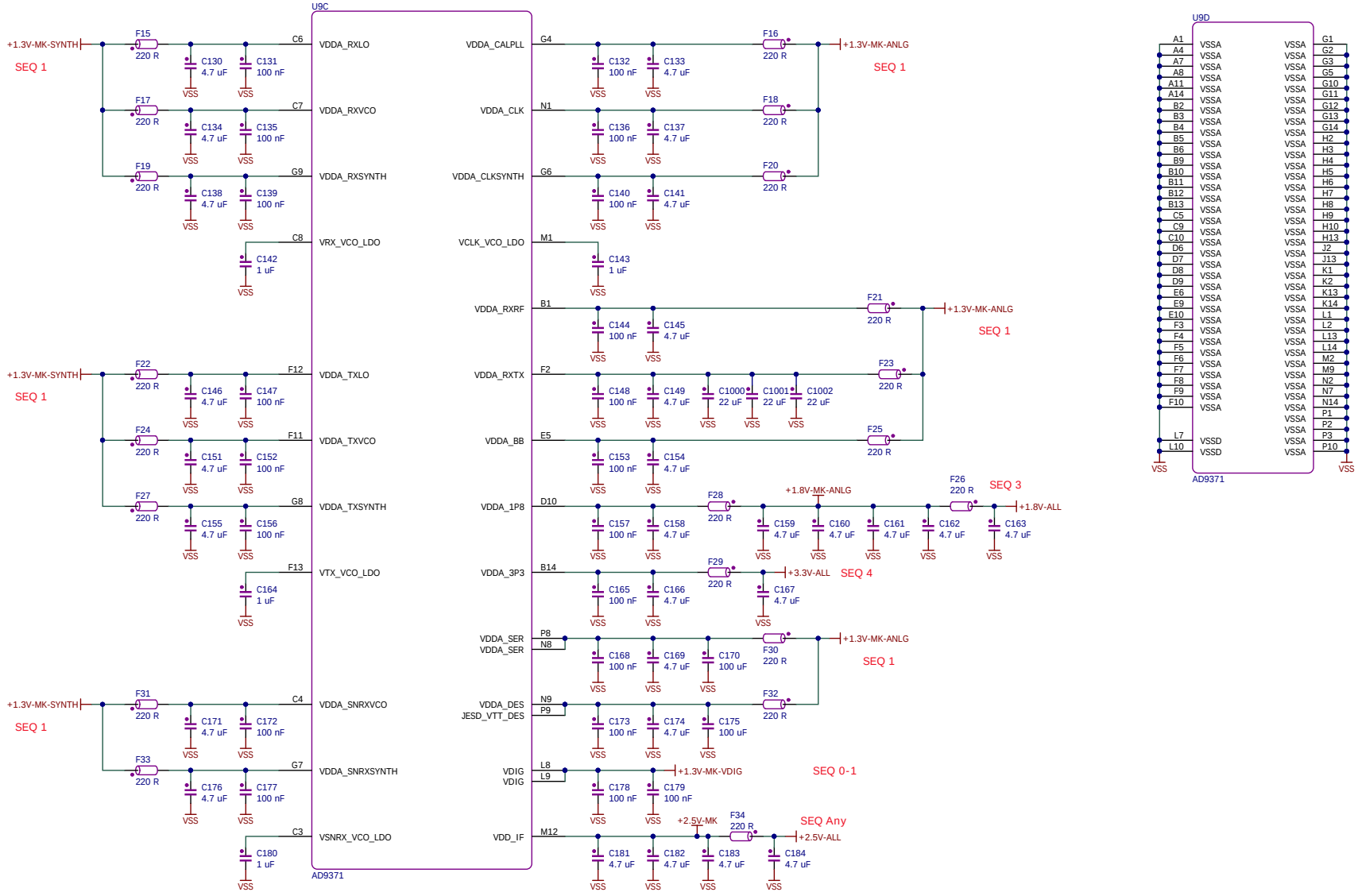

Mykonos Power Part			
USRP N3X0,DAUGHTERBOARD,AD9371,JESD204B			
SIZE C	DOC CODE 7U296	DRAWING PROJECT NO 141328E-01	REV 2
FILE NAME 07_Mykonos_Power.SchDoc		DATE 5/21/2018	SHEET 7 OF 15

141328E-01

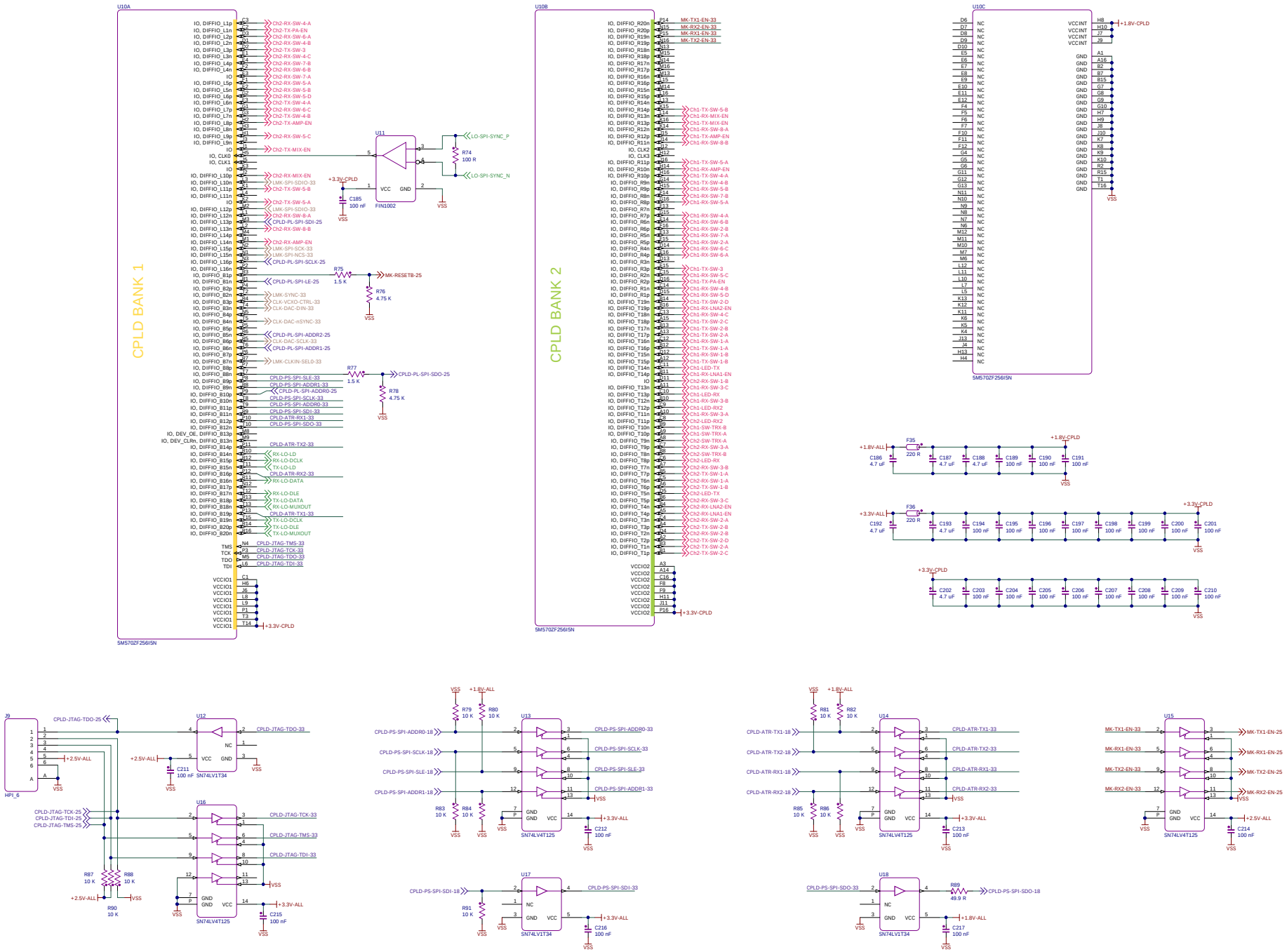

CPLD GPIO Expander			
SCH,USRP N3X0,DAUGHTERBOARD,AD9371,JESD204B			
SIZE D	DOC CODE 7U296	DRAWING PROJECT NO 141328E-01	REV 2
FILE NAME 08_CPLD.SchDoc		DATE 5/21/2018	SHEET 8 OF 15

141328E-01 2

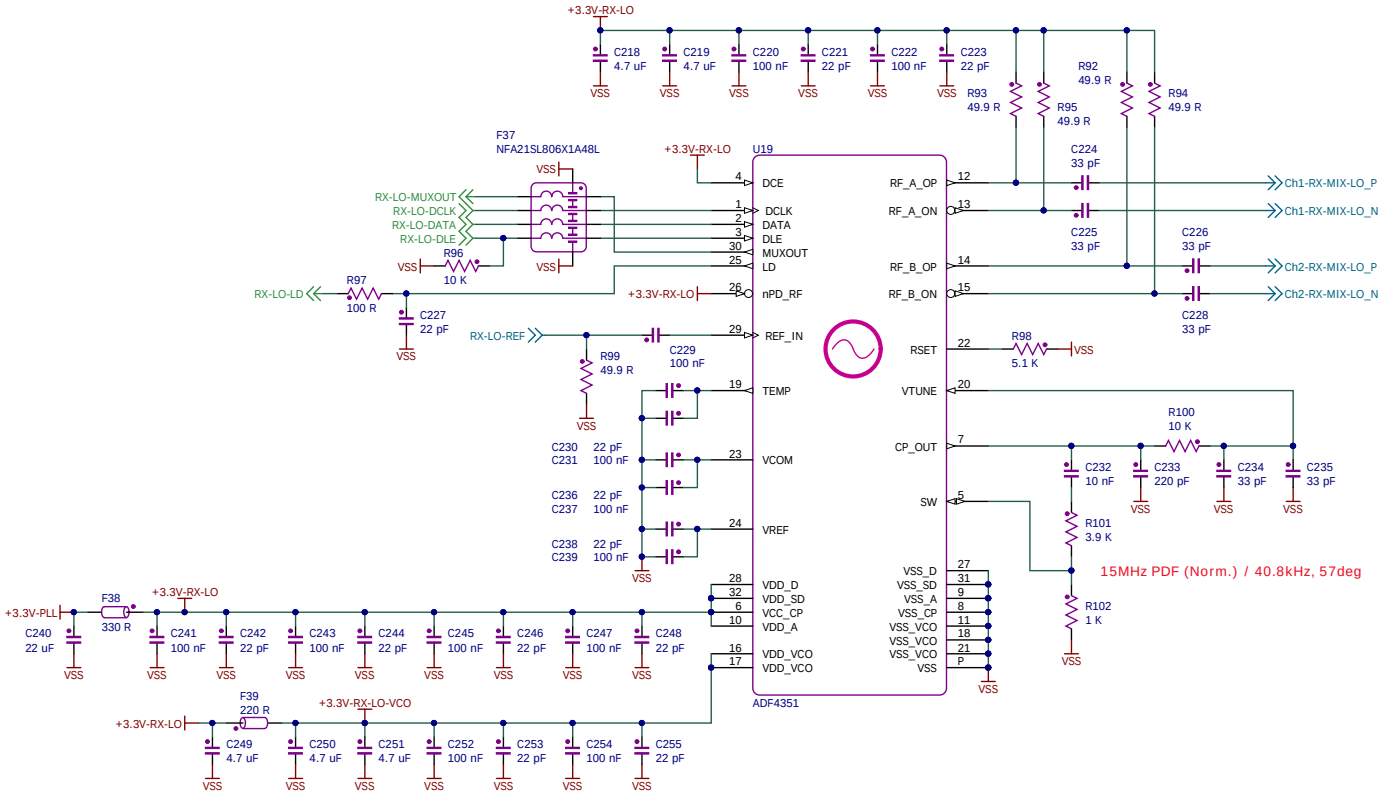

RX Low Band LO			
USRP N3X0,DAUGHTERBOARD,AD9371,JESD204B			
SIZE C	DOC CODE 7U296	DRAWING PROJECT NO 141328E-01	REV 2
FILE NAME 09_RXLO.SchDoc		DATE 5/21/2018	SHEET 9 OF 15

141328E-01

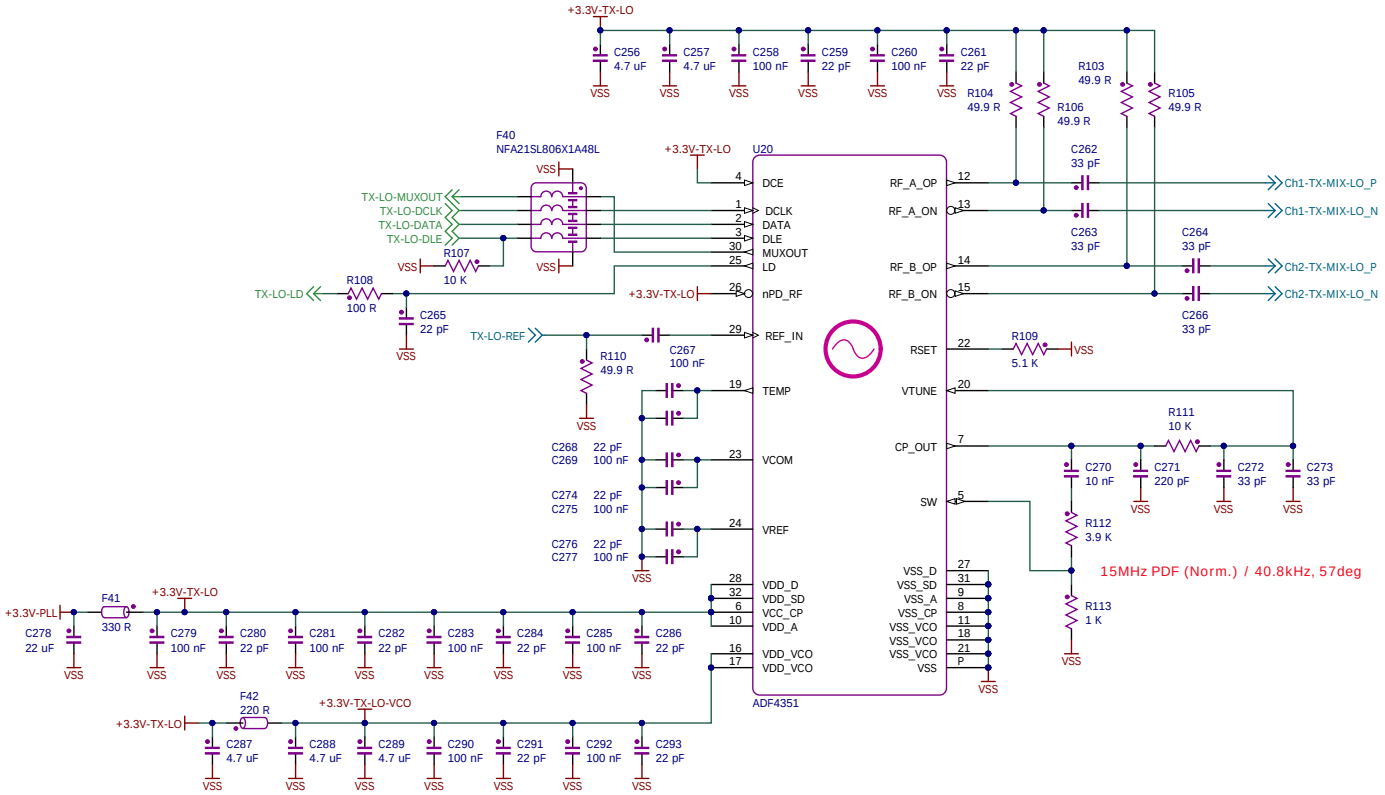

TX Low Band LO			
USRP N3X0,DAUGHTERBOARD,AD9371,JESD204B			
SIZE C	DOC CODE 7U296	DRAWING PROJECT NO 141328E-01	REV 2
FILE NAME 10_TXLO.SchDoc		DATE 5/21/2018	SHEET 10 OF 15

141328E-01

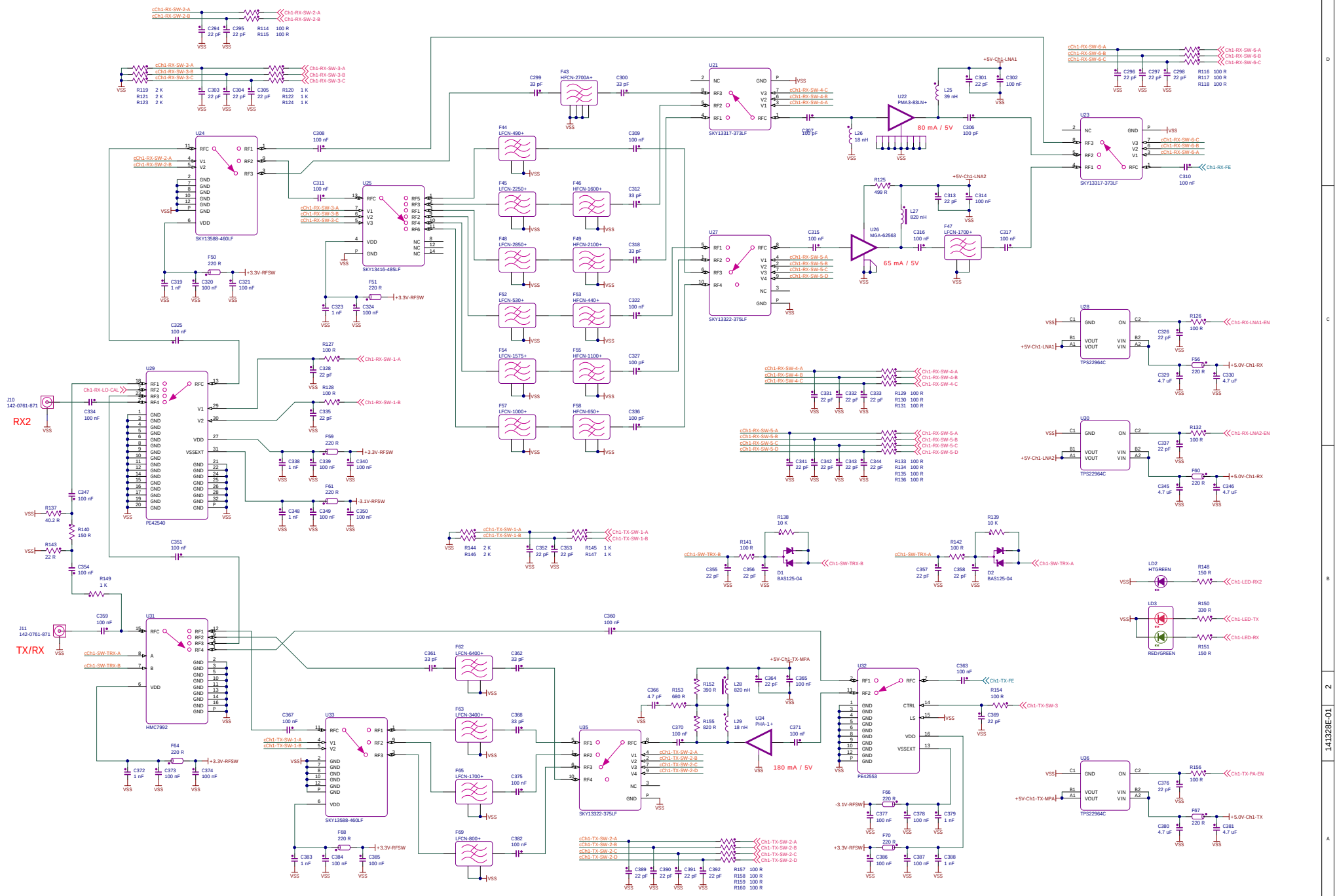
RX2
TX/RX
U24 SKY13588-460LF
U25 SKY13416-485LF
U21 SKY13317-373LF
U22 PMA3-83LN+
U23 SKY13317-373LF
U27 SKY13322-375LF
U26 MGA-62563
U28 TPS22964C
U30 TPS22964C
U29 PE42540
U31 HMC7992
U33 SKY13588-460LF
U35 SKY13322-375LF
U32 PE42553
U34 PHA-1+
U36 TPS22964C
80 mA / 5V
65 mA / 5V
180 mA / 5V
Channel 1 RF Part 1
SCH,USRP N3X0,DAUGHTERBOARD,AD9371,JESD204B
D
7U296
141328E-01
2
11_Ch1_RF_Part1.SchDoc
DATE 5/21/2018
SHEET 11 OF 15

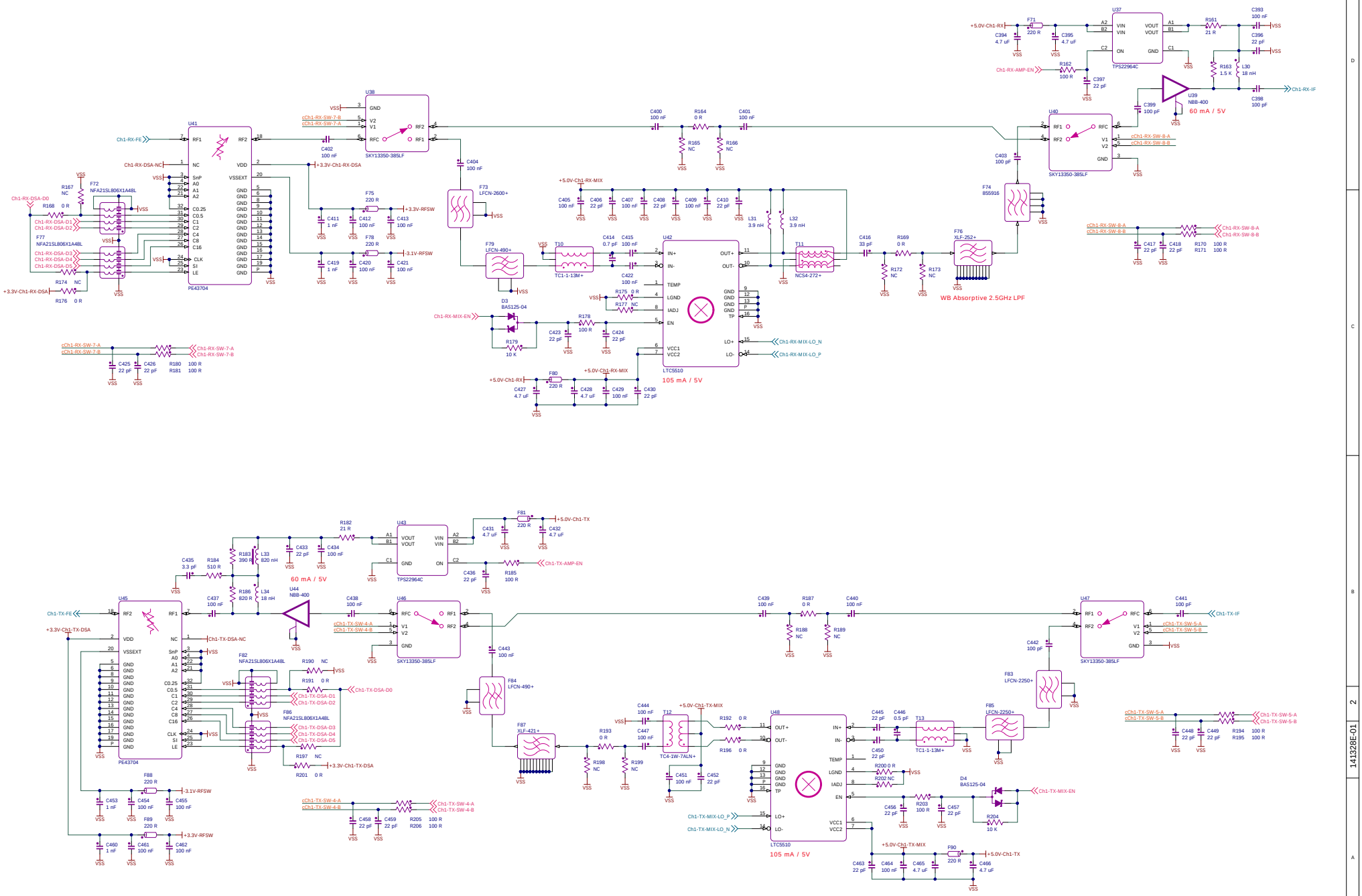
U41
PE43704
U38
SKY13350-385LF
U37
TPS22964C
U39
NBB-400
60 mA / 5V
U40
SKY13350-385LF
F73
LFCN-2600+
F74
855916
F76
XLF-252+
WB Absorptive 2.5GHz LPF
F79
LFCN-490+
T10
TC1-1-13M+
U42
LTC5510
105 mA / 5V
T11
NCS4-272+
U43
TPS22964C
U44
NBB-400
60 mA / 5V
U45
PE43704
U46
SKY13350-385LF
U47
SKY13350-385LF
F84
LFCN-490+
F87
XLF-421+
T12
TC4-1W-7ALN+
U48
LTC5510
105 mA / 5V
T13
TC1-1-13M+
F85
LFCN-2250+
F83
LFCN-2250+
D4
BAS125-04
Channel 1 RF Part 2
SCH,USRP N3X0,DAUGHTERBOARD,AD9371,JESD204B
D
7U296
141328E-01
2
12_CH1_RF_Part2.SchDoc
DATE 5/21/2018
SHEET 12 OF 15

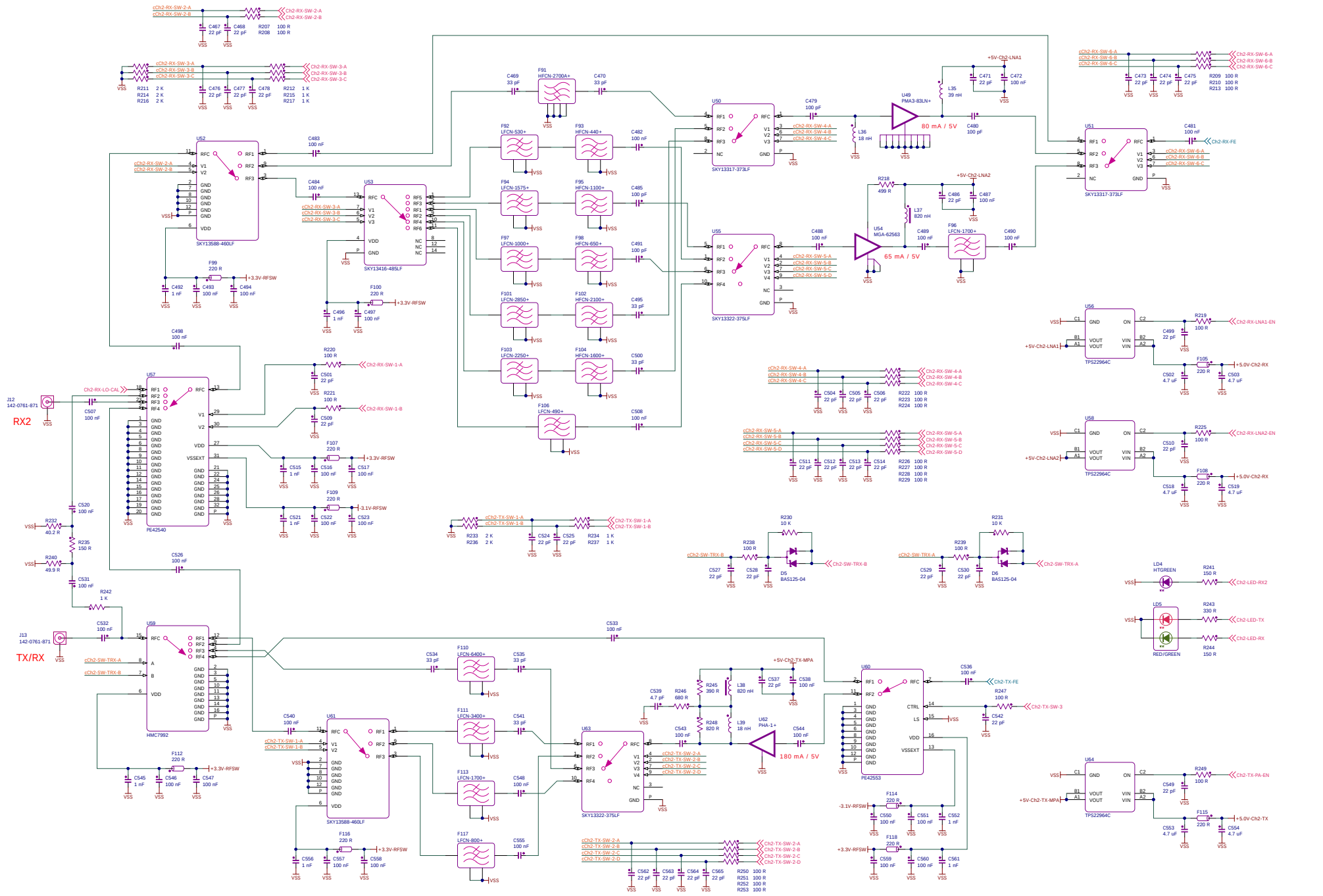
RX2
TX/RX
U52 SKY13588-460LF
U53 SKY13416-485LF
U50 SKY13317-373LF
U55 SKY13322-375LF
U49 PMA3-83LN+
80 mA / 5V
U54 MGA-62563
65 mA / 5V
U51 SKY13317-373LF
U56 TPS22964C
U58 TPS22964C
U57 PE42540
U59 HMC7992
U61 SKY13588-460LF
U63 SKY13322-375LF
U62 PHA-1+
180 mA / 5V
U60 PE42553
U64 TPS22964C
D5 BAS125-04
D6 BAS125-04
LD4 HTGREEN
LD5 RED/GREEN
F91 HFCN-2700A+
F92 LFCN-530+
F93 HFCN-440+
F94 LFCN-1575+
F95 HFCN-1100+
F97 LFCN-1000+
F98 HFCN-650+
F101 LFCN-2850+
F102 HFCN-2100+
F103 LFCN-2250+
F104 HFCN-1600+
F106 LFCN-490+
F96 LFCN-1700+
F110 LFCN-6400+
F111 LFCN-3400+
F113 LFCN-1700+
F117 LFCN-800+
+5V-Ch2-LNA1
+5V-Ch2-LNA2
+5V-Ch2-TX-MPA
+3.3V-RFSW
-3.1V-RFSW
+5.0V-Ch2-RX
+5.0V-Ch2-TX
Ch2-RX-LNA1-EN
Ch2-RX-LNA2-EN
Ch2-TX-PA-EN
Ch2-LED-RX2
Ch2-LED-TX
Ch2-LED-RX
Ch2-TX-SW-3
Ch2-TX-FE
Ch2-RX-FE
Channel 2 RF Part 1
SCH,USRP N3X0,DAUGHTERBOARD,AD9371,JESD204B
SIZE D
DOC CODE 7U296
DRAWING PROJECT NO 141328E-01
REV 2
FILE NAME 13_CH2_RF_Part1.SchDoc
DATE 5/21/2018
SHEET 13 OF 15

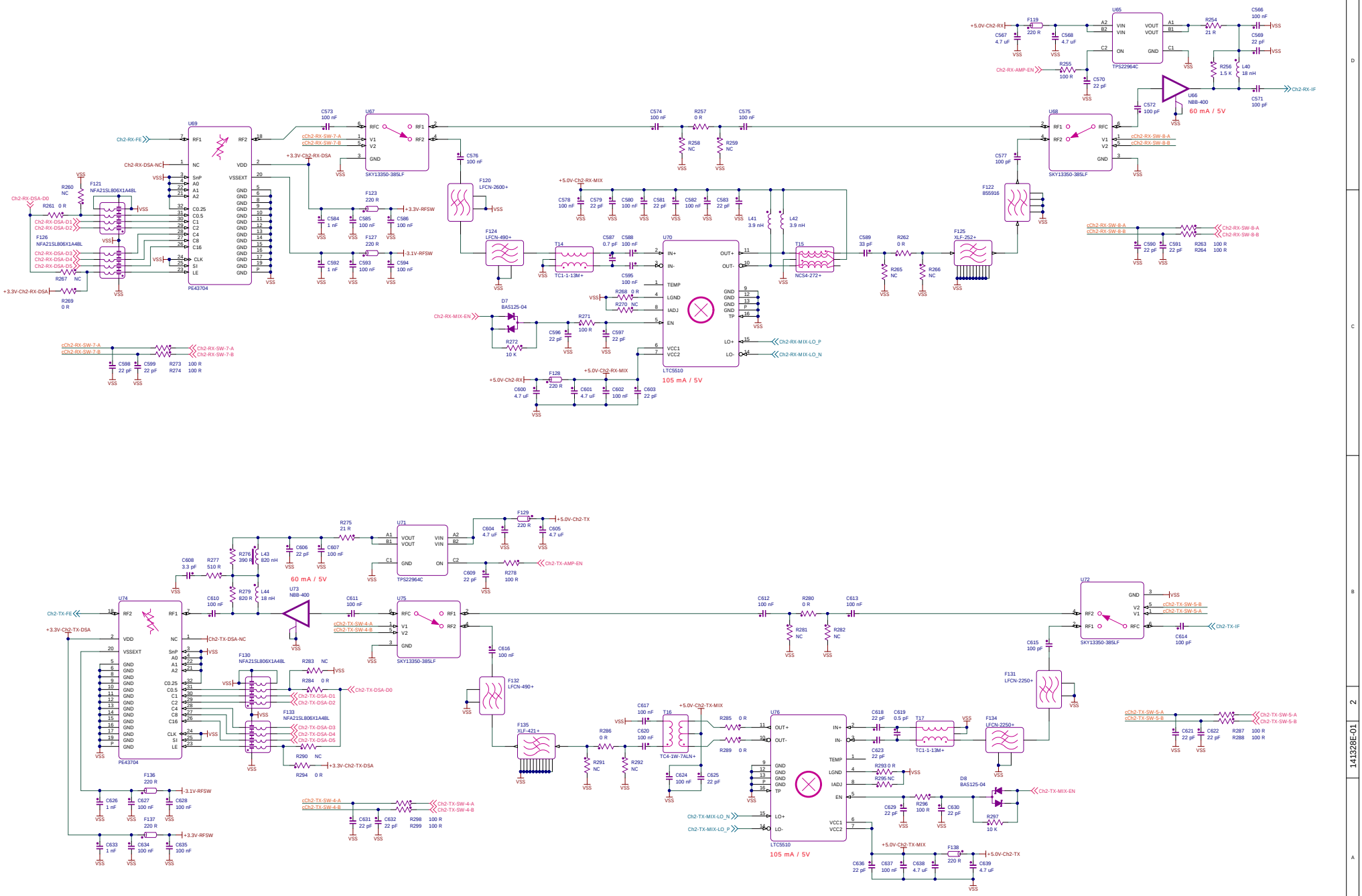

Channel 2 RF Part 2

SCH,USRP N3X0,DAUGHTERBOARD,AD9371,JESD204B

SIZE	DOC CODE	DRAWING PROJECT NO	REV
D	7U296	141328E-01	2

FILE NAME 14_CH2_RF_Part2.SchDoc | DATE 5/21/2018 | SHEET 14 OF 15

VRUN 1.3V TO ENABLE

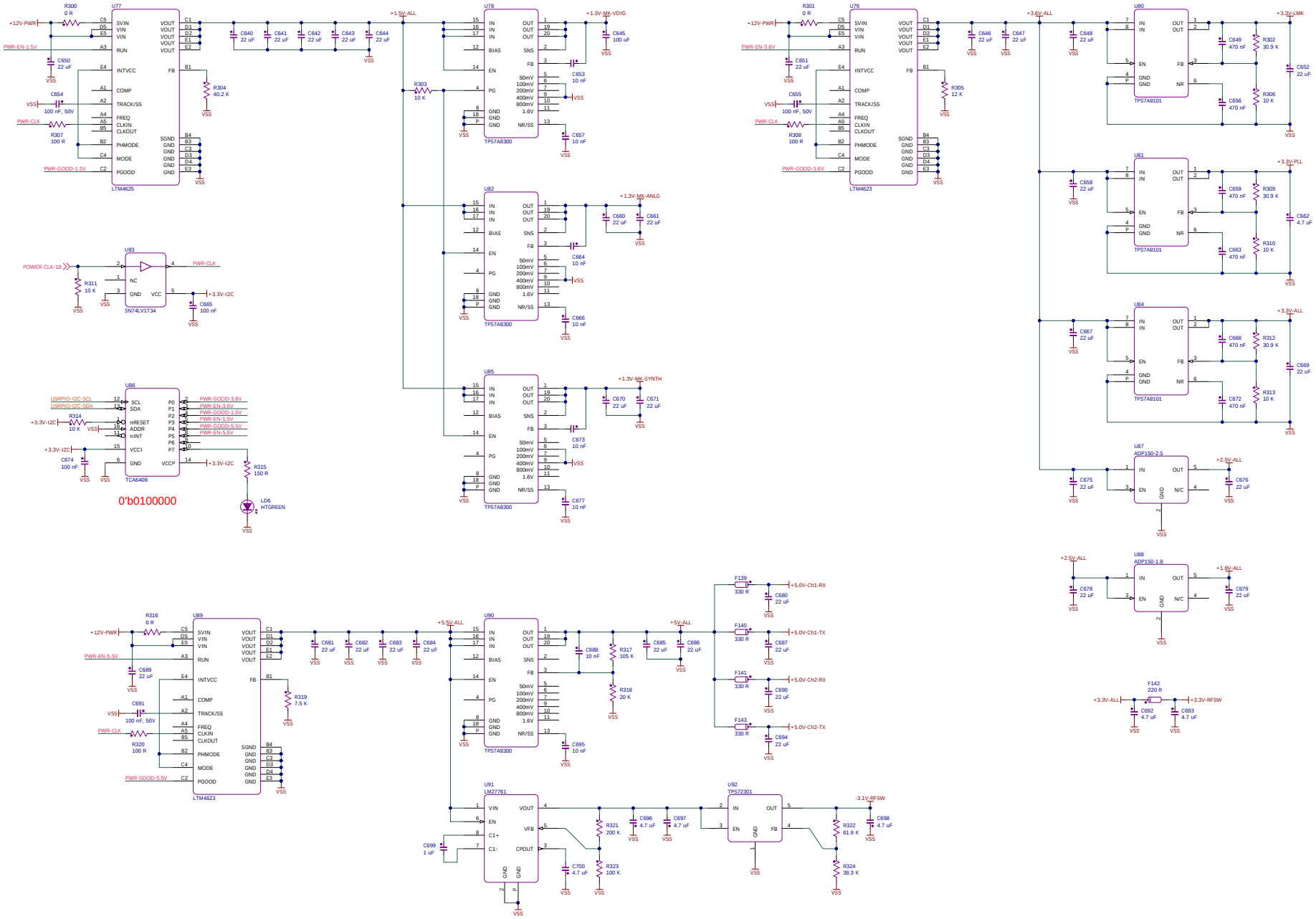

Power Supply			
SCH,USRP N3X0,DAUGHTERBOARD,AD9371,JESD204B			
SIZE	DOC CODE	DRAWING PROJECT NO	REV
D	7U296	141328E-01	2
FILE NAME 15_Power.SchDoc		DATE 5/21/2018	SHEET 15 OF 15

141328E-01