This document contains confidential and proprietary information which is the property of National Instruments Corporation. This proprietary information is supplied to the possessor pursuant to the possessor's agreement to do the following:

1. to maintain this document in confidence;
2. not to reproduce, publish or copy it in whole or in part without written permission; and
3. not to use this document as a basis for the manufacture or sale of goods without written permission.

© COPYRIGHT 2018
NATIONAL INSTRUMENTS CORP. ALL RIGHTS RESERVED.

REVISIONS	
REV	DESCRIPTION
0	REFER TO DATABASE FOR DWG STATUS

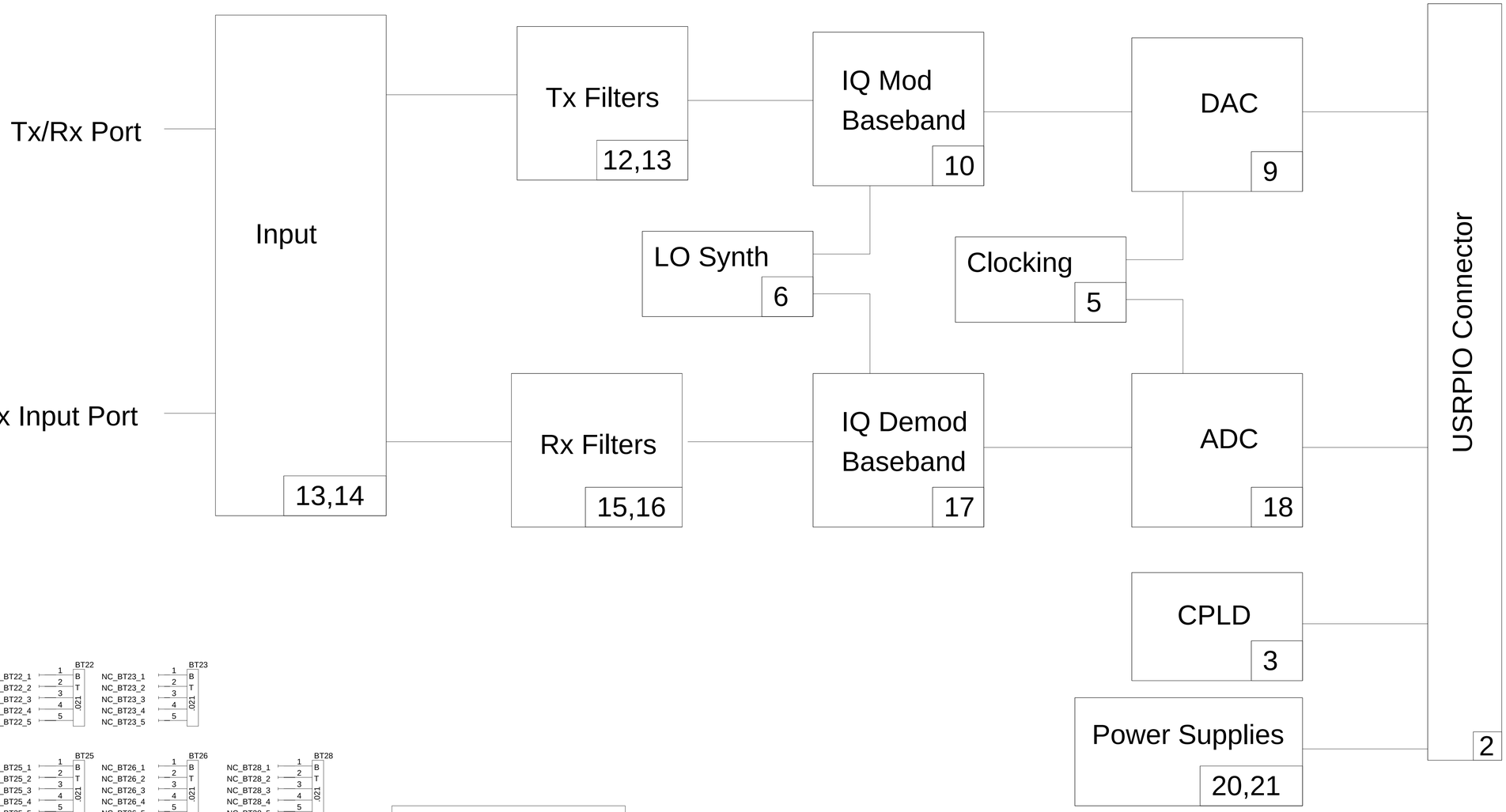

Break off Tab Mouse Bites

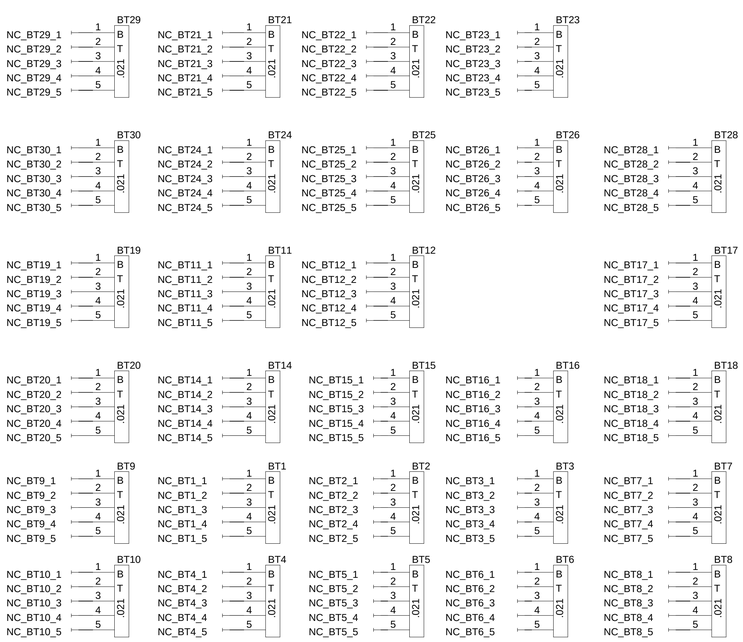

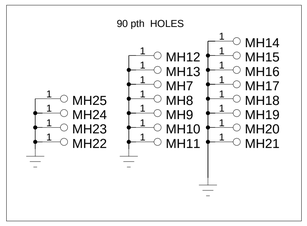

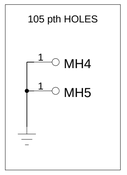

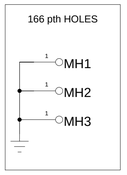

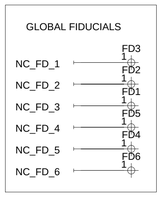

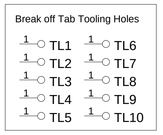

DESIGN TEAM	
DRAWN MY NAME HERE	DATE DD/MM/YYYY
REVISED	DATE
CHECKED MY NAME HERE	
TECH MY NAME HERE	
ENGR MY NAME HERE	

NATIONAL INSTRUMENTS®
AUSTIN, TEXAS

TITLE
SCHEMATIC DIAGRAM
N320/N321 Daughterboard
200 MHZ BW (1MHz-6GHz)

SIZE	CODE IDENT NO.	DRAWING NO.	
C	7U296	146456B-01	0
SCALE: NONE		SHEET 1 OF 21	

This document contains confidential and proprietary information which is the property of National Instruments Corporation. This proprietary information is supplied to the possessor pursuant to the possessor's agreement to do the following:

1. to maintain this document in confidence;
2. not to reproduce, publish or copy it in whole or in part without written permission; and
3. not to use this document as a basis for the manufacture or sale of goods without written permission.

© COPYRIGHT 2018
NATIONAL INSTRUMENTS CORP. ALL RIGHTS RESERVED.

1.8V

2.5V

MGT

N3XX Mother Board Connector

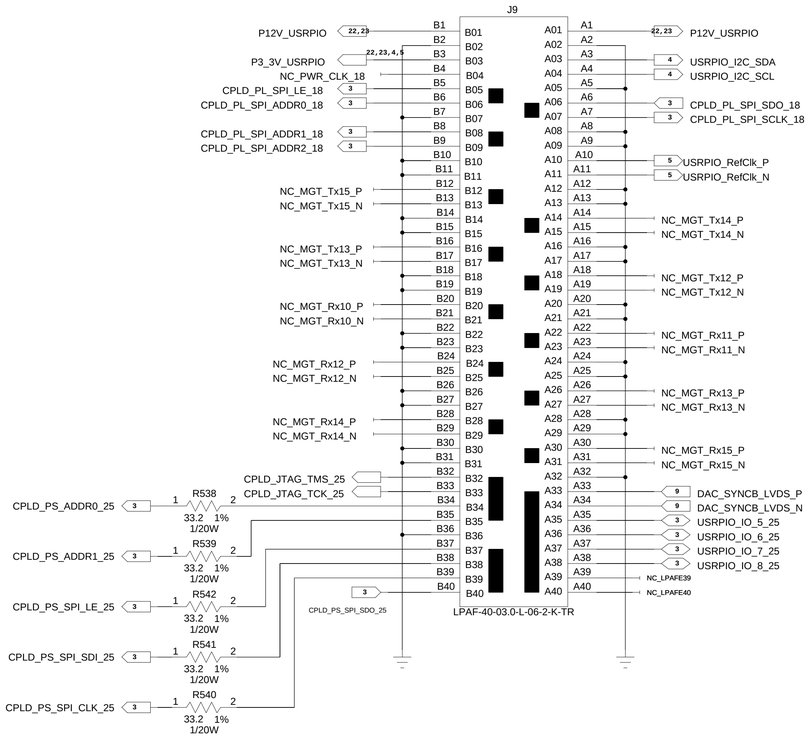

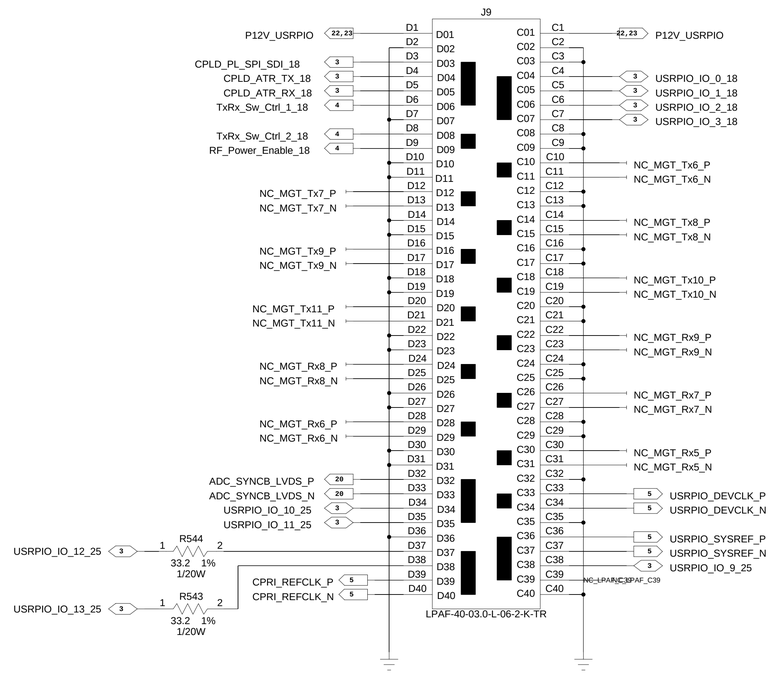

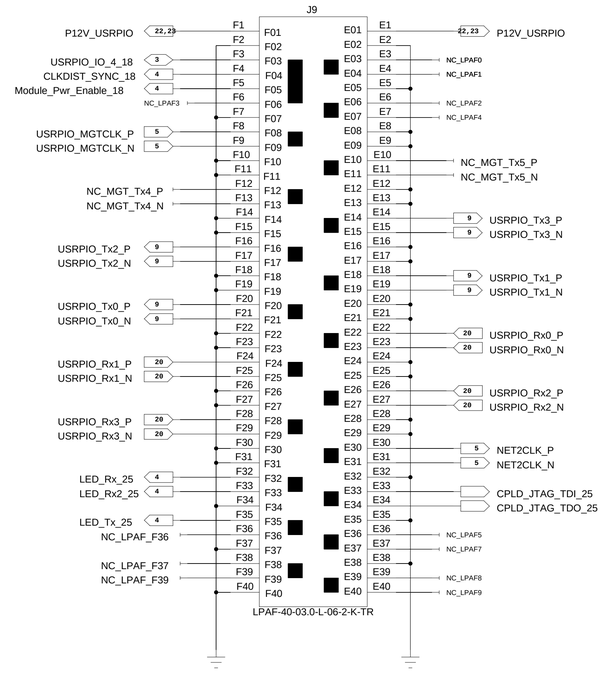

LO Distribution Board Mezzanine Connector

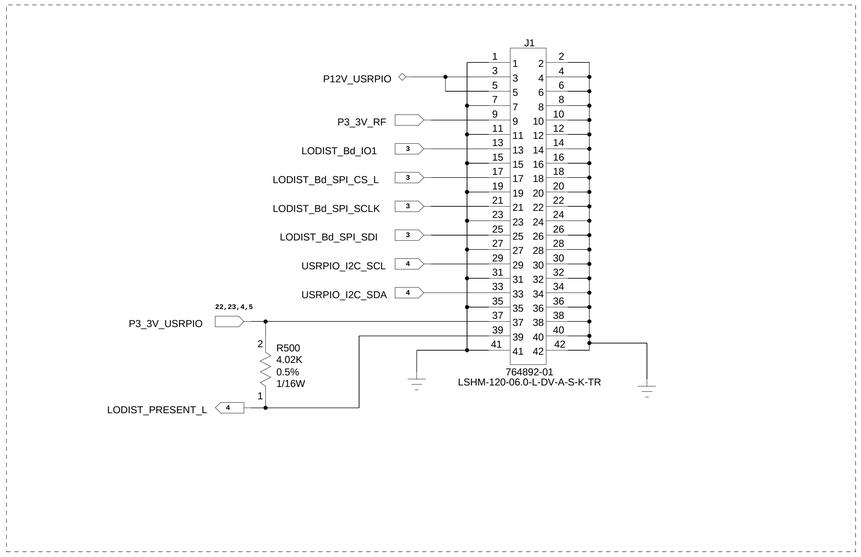

USRPIO Connector			
N320/N321 6GHz Transceiver			
SIZE C	CODE IDENT NO. 7U296	DRAWING NO. 146456B-01	0
SCALE: NONE		SHEET 2 OF 21	

This document contains confidential and proprietary information which is the property of National Instruments Corporation. This proprietary information is supplied to the possessor pursuant to the possessor's agreement to do the following:

1. to maintain this document in confidence;
2. not to reproduce, publish or copy it in whole or in part without written permission; and
3. not to use this document as a basis for the manufacture or sale of goods without written permission.

© COPYRIGHT 2018
NATIONAL INSTRUMENTS CORP. ALL RIGHTS RESERVED.

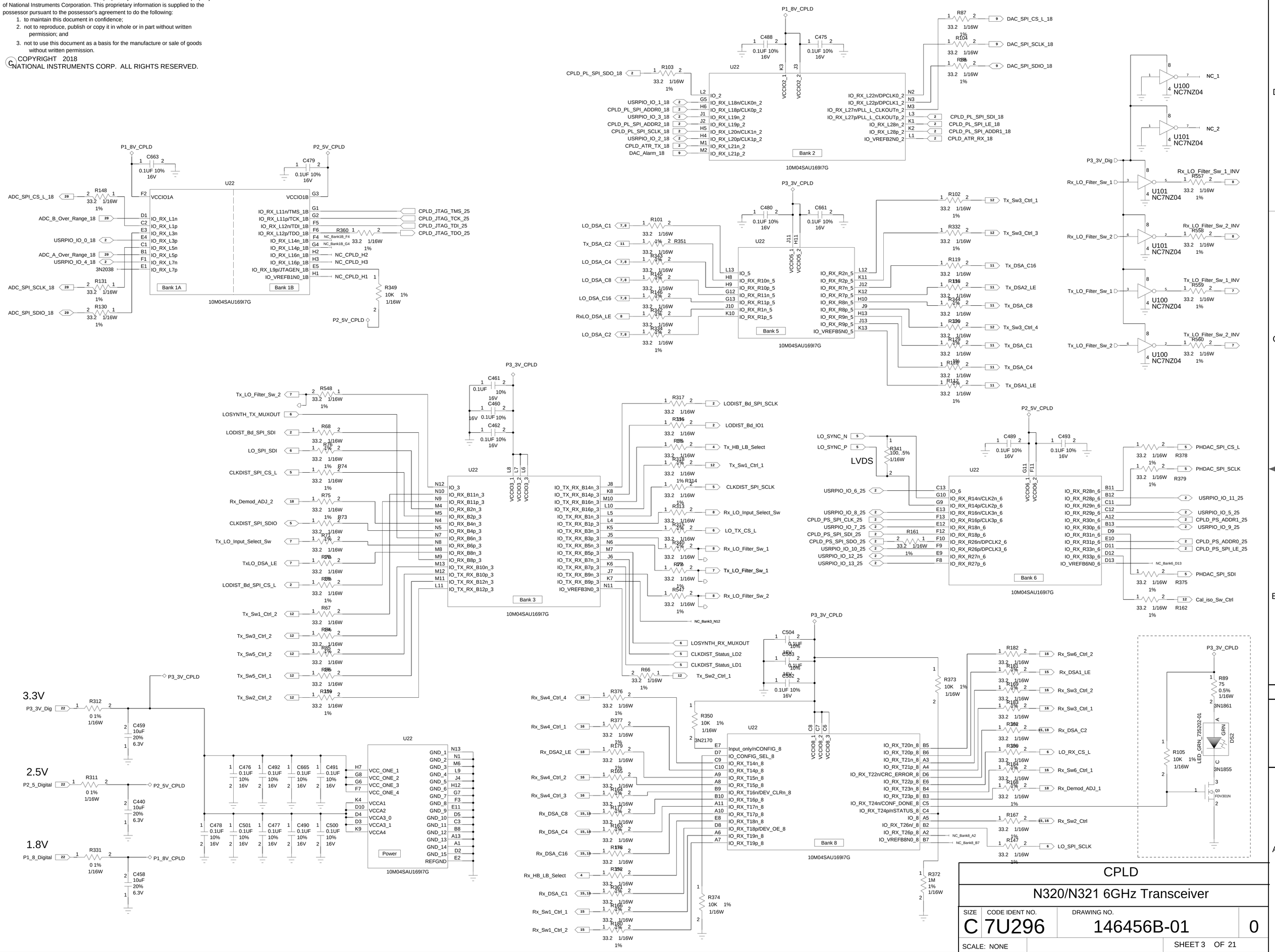

This document contains confidential and proprietary information which is the property of National Instruments Corporation. This proprietary information is supplied to the possessor pursuant to the possessor's agreement to do the following:

1. to maintain this document in confidence;
2. not to reproduce, publish or copy it in whole or in part without written permission; and
3. not to use this document as a basis for the manufacture or sale of goods without written permission.

© COPYRIGHT 2018
NATIONAL INSTRUMENTS CORP. ALL RIGHTS RESERVED.

EEPROM

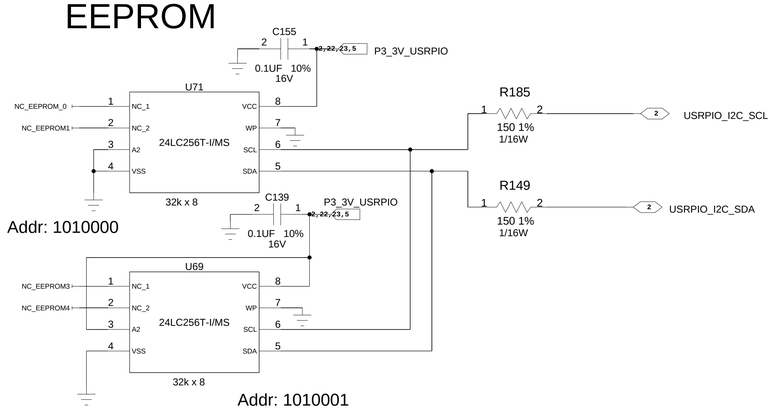

Addr: 1010000

Addr: 1010001

Temperature Sensor

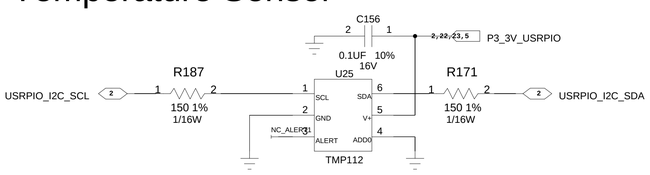

Addr: 1001000

Status Indicators

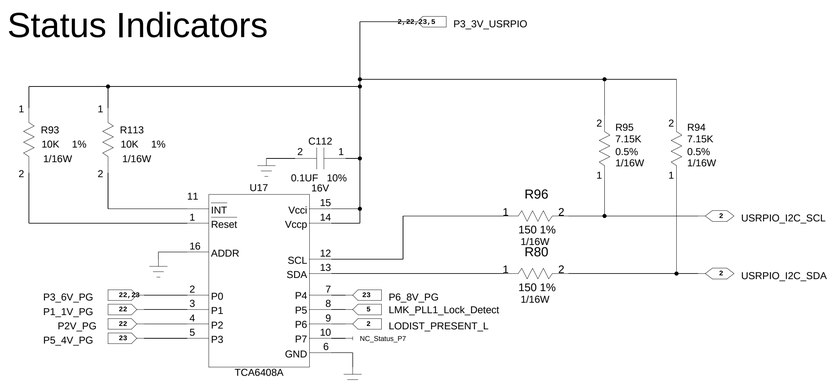

Addr: 01000000

Level Translators

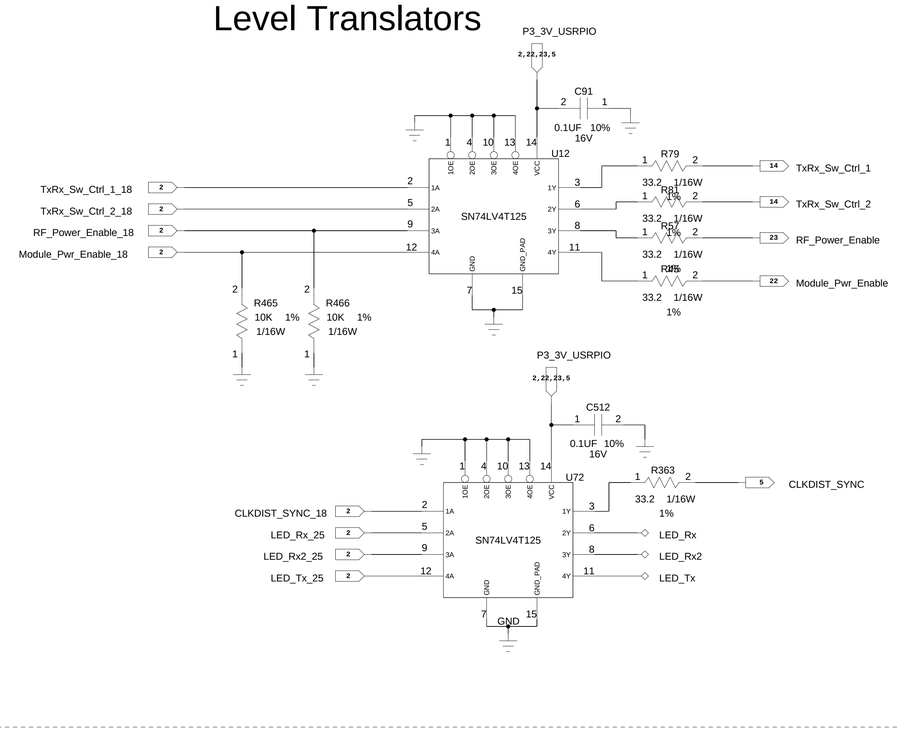

Amplifier Load Switches

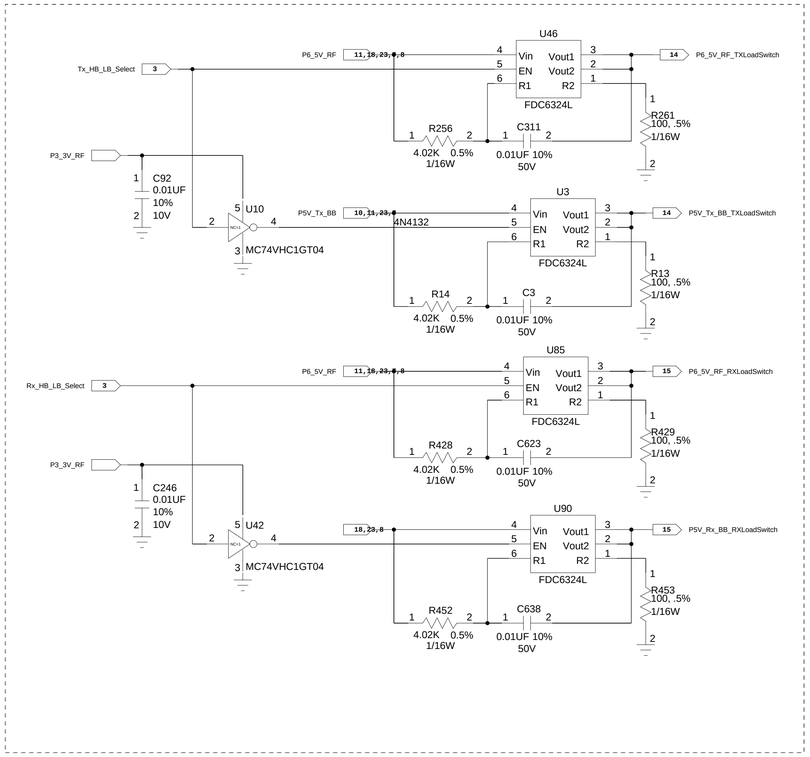

Front Panel LEDs

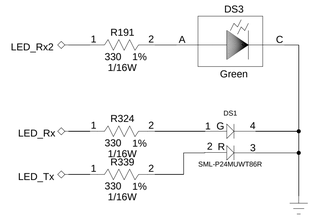

Misc			
N320/N321 6GHz Transceiver			
SIZE C	CODE IDENT NO. 7U296	DRAWING NO. 146456B-01	0
SCALE: NONE		SHEET 4 OF 21	

This document contains confidential and proprietary information which is the property of National Instruments Corporation. This proprietary information is supplied to the possessor pursuant to the possessor's agreement to do the following:

1. to maintain this document in confidence;
2. not to reproduce, publish or copy it in whole or in part without written permission; and
3. not to use this document as a basis for the manufacture or sale of goods without written permission.

© COPYRIGHT 2018
NATIONAL INSTRUMENTS CORP. ALL RIGHTS RESERVED.

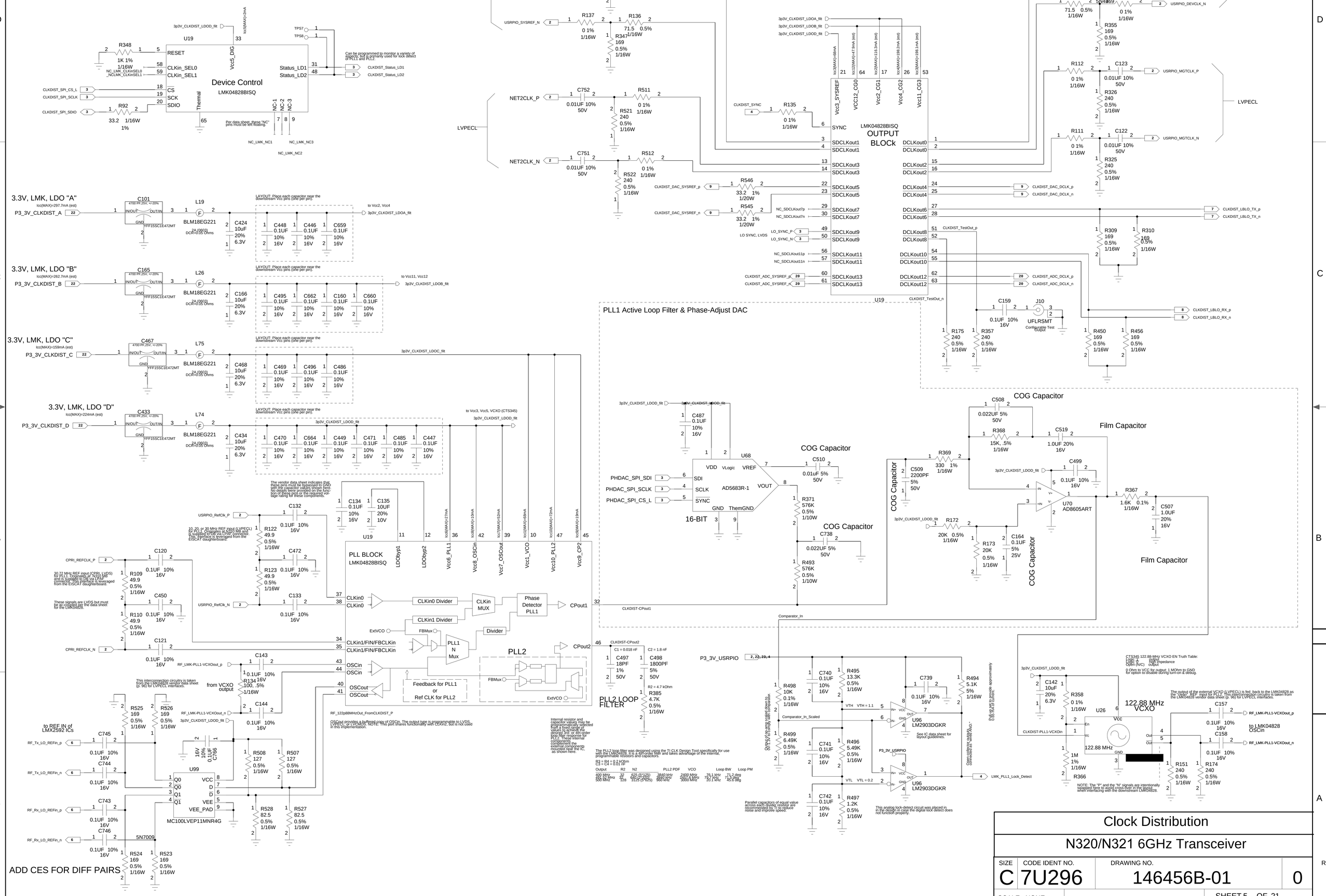

Clock Distribution

N320/N321 6GHz Transceiver

SIZE	CODE IDENT NO.	DRAWING NO.	
C	7U296	146456B-01	0
SCALE: NONE		SHEET 5 OF 21	

This document contains confidential and proprietary information which is the property of National Instruments Corporation. This proprietary information is supplied to the possessor pursuant to the possessor's agreement to do the following:

1. to maintain this document in confidence;
2. not to reproduce, publish or copy it in whole or in part without written permission; and
3. not to use this document as a basis for the manufacture or sale of goods without written permission.

© COPYRIGHT 2018
NATIONAL INSTRUMENTS CORP. ALL RIGHTS RESERVED.

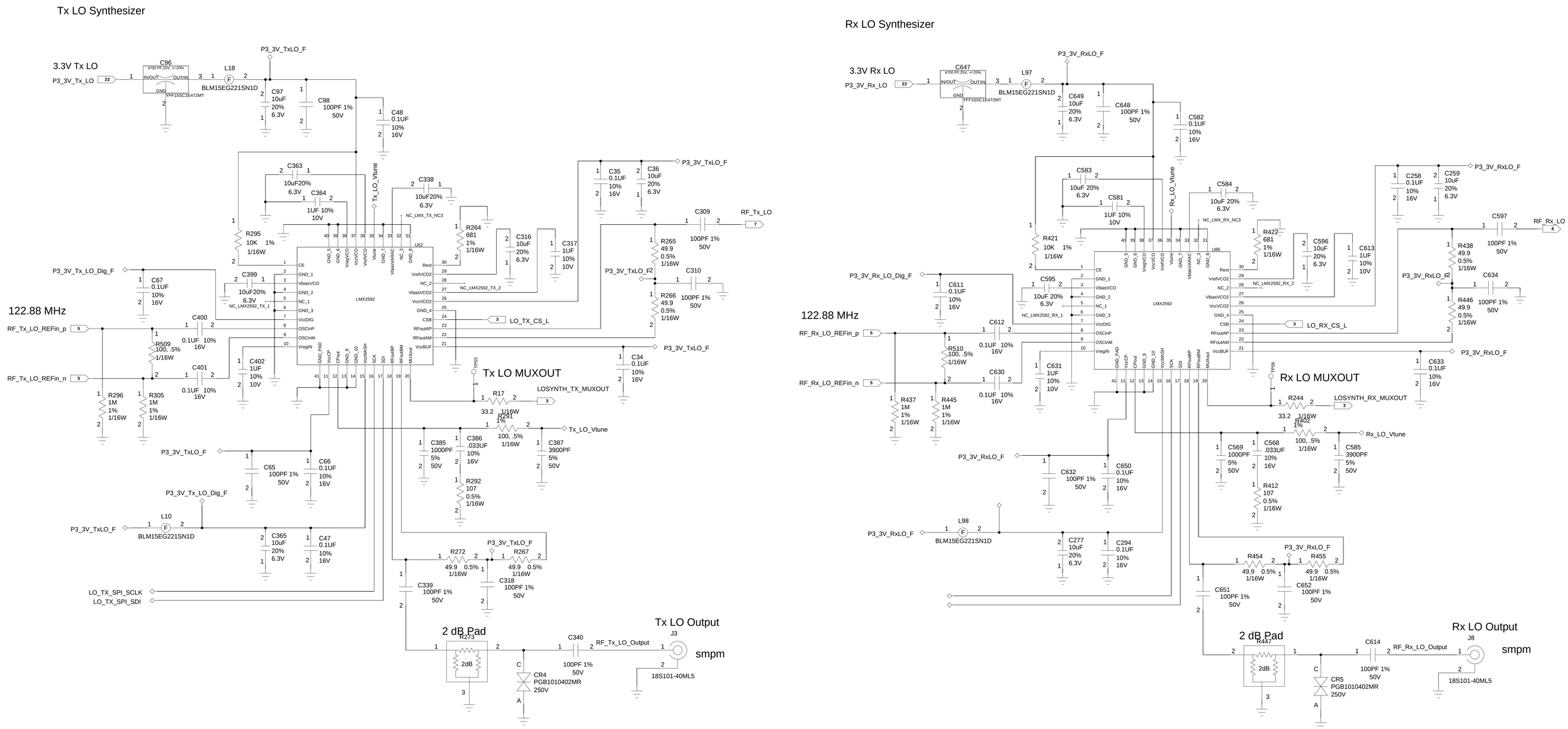

LO Synth			
N320/N321 6GHz Transceiver			
SIZE C	CODE IDENT NO. 7U296	DRAWING NO. 146456B-01	0
SCALE: NONE		SHEET 6 OF 21	

This document contains confidential and proprietary information which is the property of National Instruments Corporation. This proprietary information is supplied to the possessor pursuant to the possessor's agreement to do the following:

1. to maintain this document in confidence;
2. not to reproduce, publish or copy it in whole or in part without written permission; and
3. not to use this document as a basis for the manufacture or sale of goods without written permission.

© COPYRIGHT 2018
NATIONAL INSTRUMENTS CORP. ALL RIGHTS RESERVED.

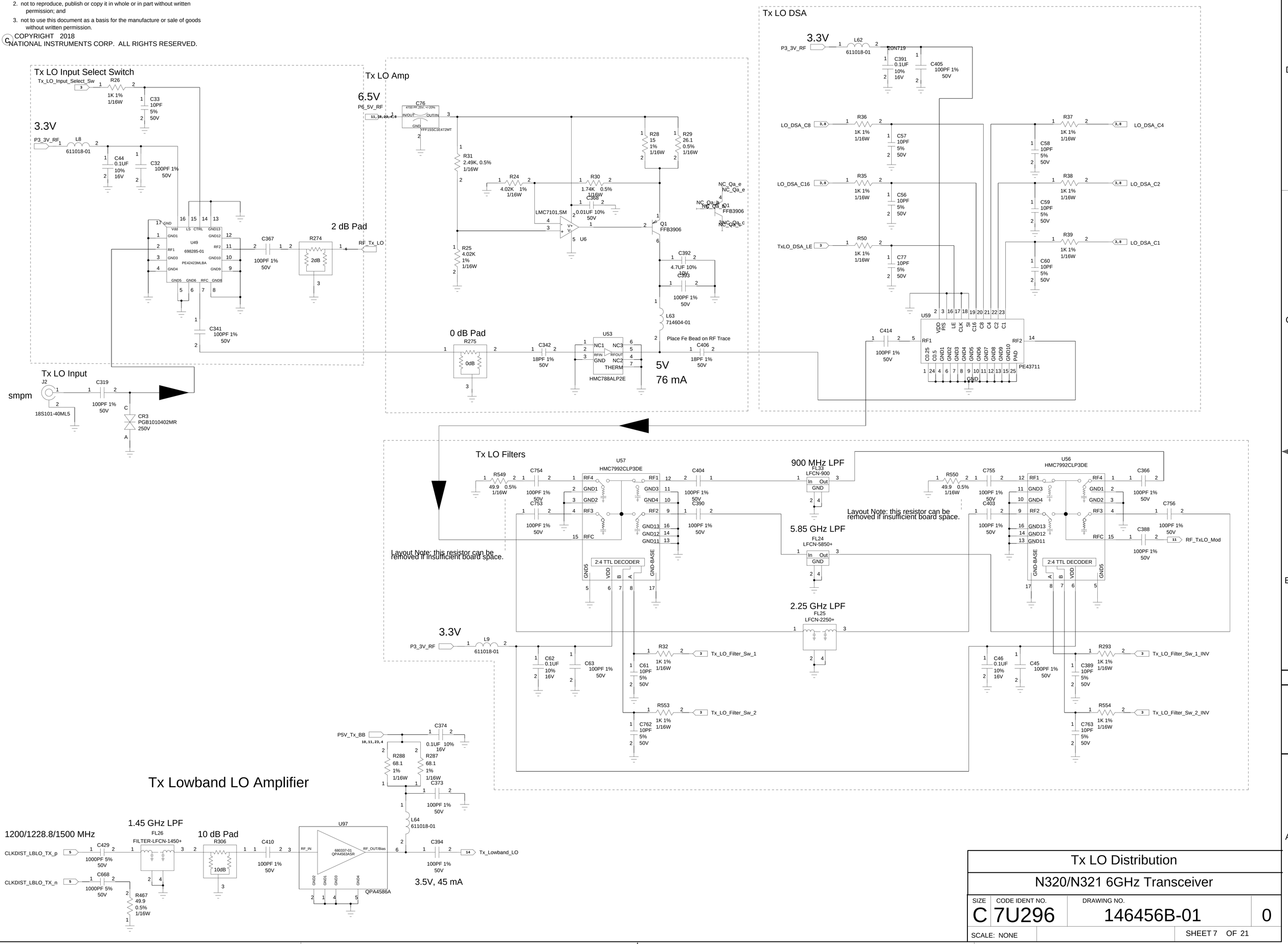

Tx LO Distribution

N320/N321 6GHz Transceiver

SIZE	CODE IDENT NO.	DRAWING NO.	
C	7U296	146456B-01	0
SCALE: NONE		SHEET 7 OF 21	

This document contains confidential and proprietary information which is the property of National Instruments Corporation. This proprietary information is supplied to the possessor pursuant to the possessor's agreement to do the following:

1. to maintain this document in confidence;
2. not to reproduce, publish or copy it in whole or in part without written permission; and
3. not to use this document as a basis for the manufacture or sale of goods without written permission.

© COPYRIGHT 2018
NATIONAL INSTRUMENTS CORP. ALL RIGHTS RESERVED.

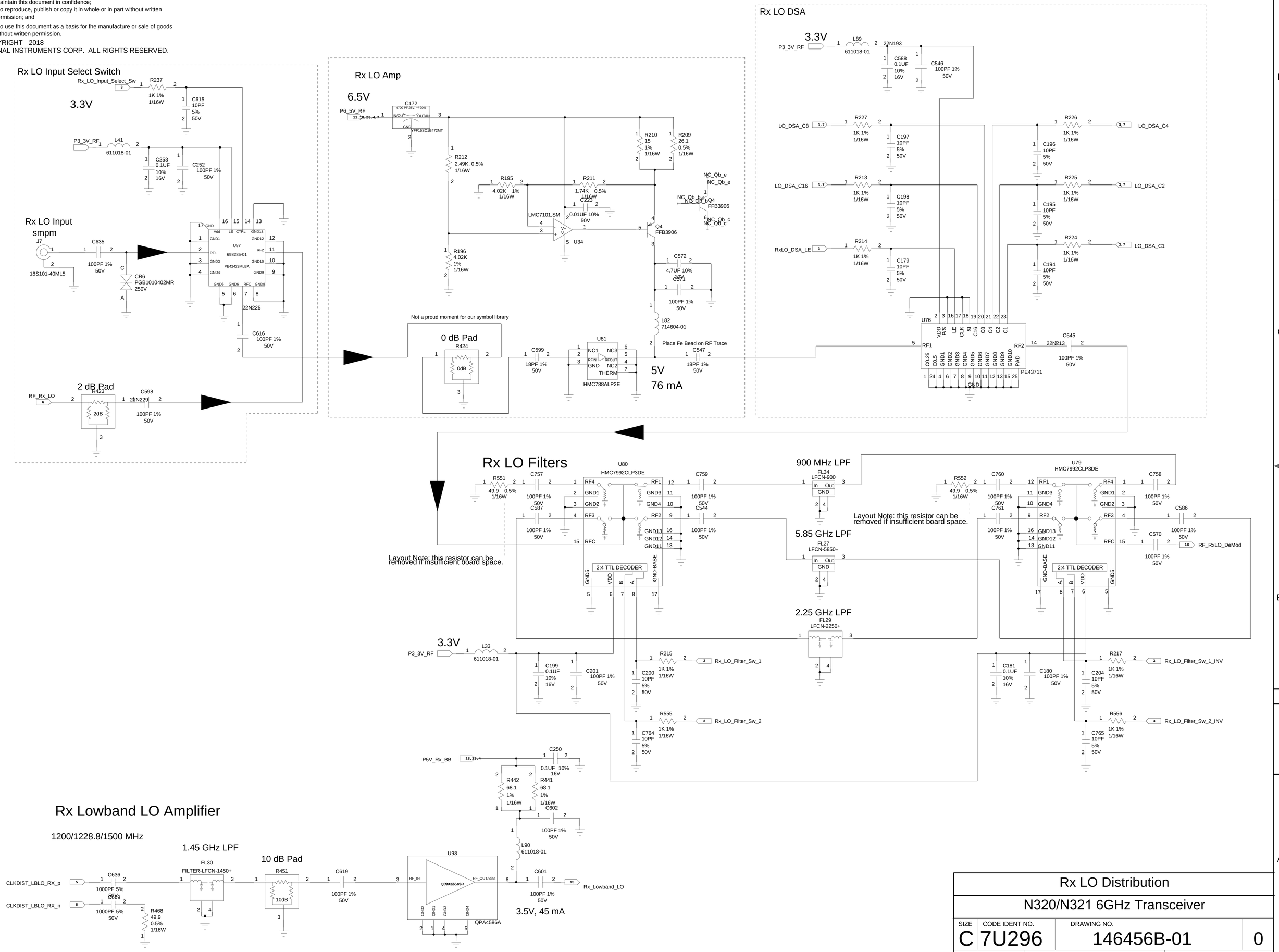

Rx LO Distribution

N320/N321 6GHz Transceiver

SIZE	CODE IDENT NO.	DRAWING NO.	
C	7U296	146456B-01	0
SCALE: NONE		SHEET 8 OF 21	

This document contains confidential and proprietary information which is the property of National Instruments Corporation. This proprietary information is supplied to the possessor pursuant to the possessor's agreement to do the following:

1. to maintain this document in confidence;
2. not to reproduce, publish or copy it in whole or in part without written permission; and
3. not to use this document as a basis for the manufacture or sale of goods without written permission.

© COPYRIGHT 2018
NATIONAL INSTRUMENTS CORP. ALL RIGHTS RESERVED.

DAC

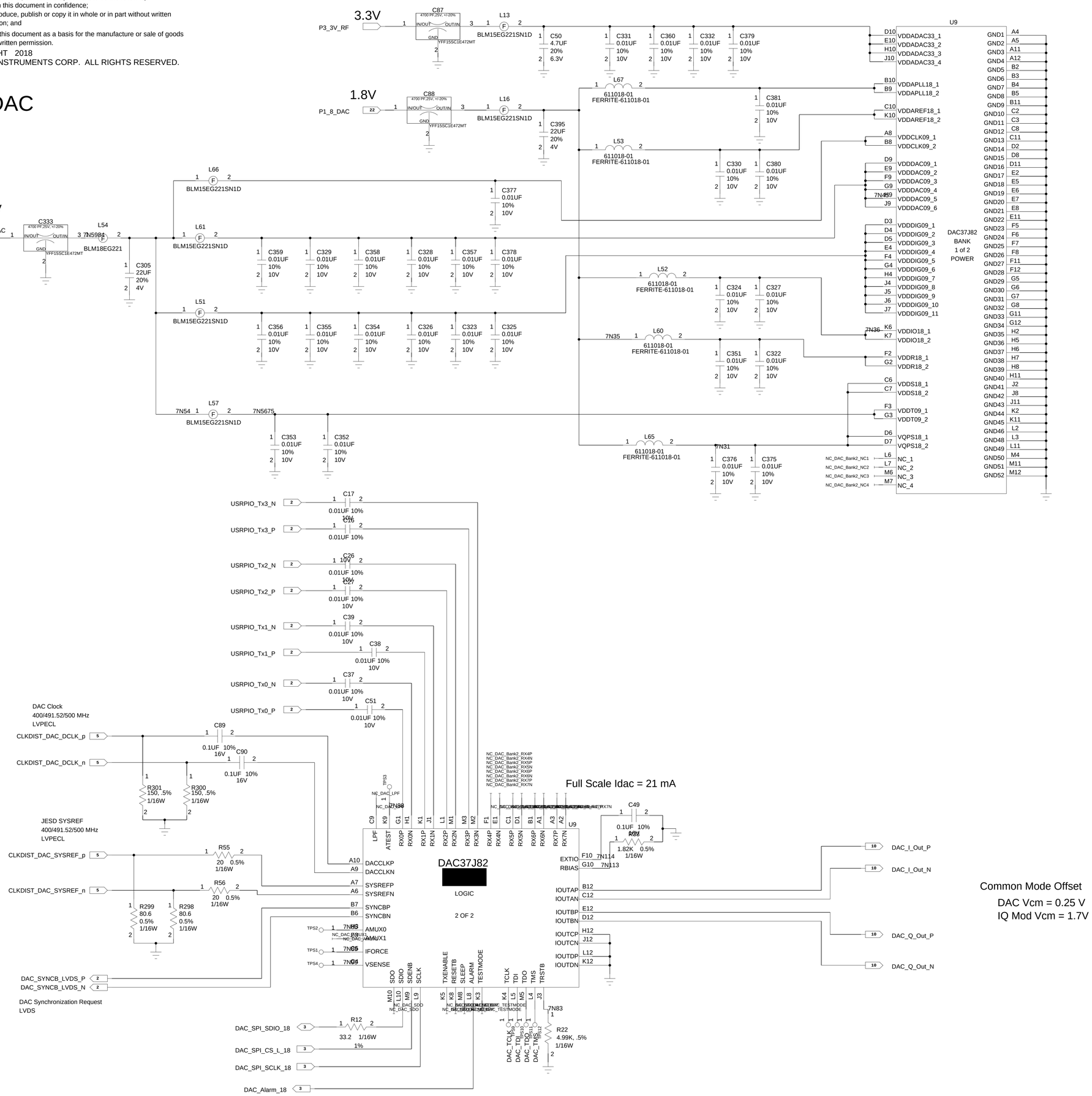

Tx DAC			
N320/N321 6GHz Transceiver			
SIZE C	CODE IDENT NO. 7U296	DRAWING NO. 146456B-01	0
SCALE: NONE		SHEET 9 OF 21	

This document contains confidential and proprietary information which is the property of National Instruments Corporation. This proprietary information is supplied to the possessor pursuant to the possessor's agreement to do the following:

1. to maintain this document in confidence;
2. not to reproduce, publish or copy it in whole or in part without written permission; and
3. not to use this document as a basis for the manufacture or sale of goods without written permission.

© COPYRIGHT 2018
NATIONAL INSTRUMENTS CORP. ALL RIGHTS RESERVED.

Reconstruction Filters:
150 MHz BW

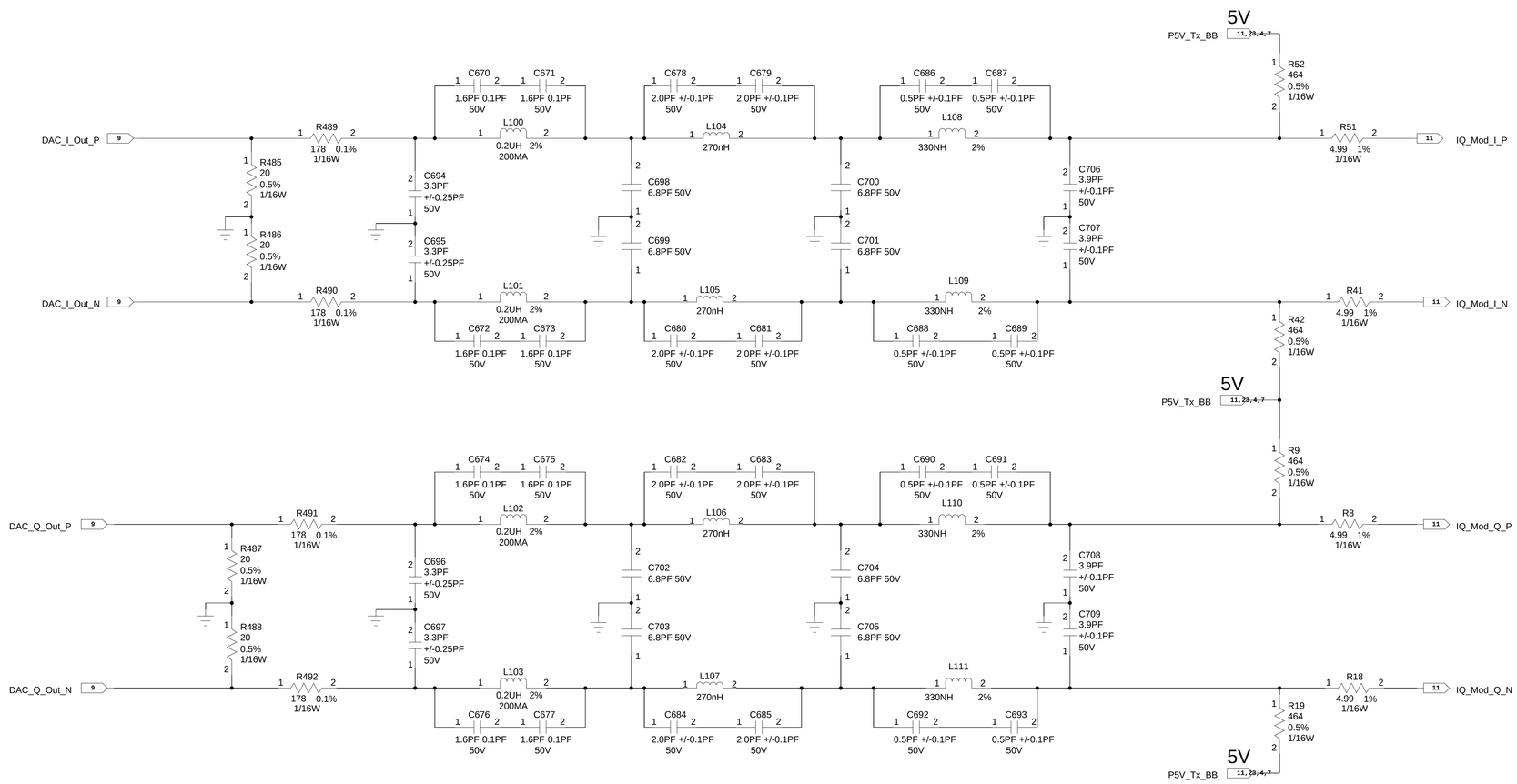

Tx Baseband Filters			
N320/N321 6GHz Transceiver			
SIZE C	CODE IDENT NO. 7U296	DRAWING NO. 146456B-01	0
SCALE: NONE		SHEET10 OF 23	

This document contains confidential and proprietary information which is the property of National Instruments Corporation. This proprietary information is supplied to the possessor pursuant to the possessor's agreement to do the following:

1. to maintain this document in confidence;
2. not to reproduce, publish or copy it in whole or in part without written permission; and
3. not to use this document as a basis for the manufacture or sale of goods without written permission.

© COPYRIGHT 2018
NATIONAL INSTRUMENTS CORP. ALL RIGHTS RESERVED.

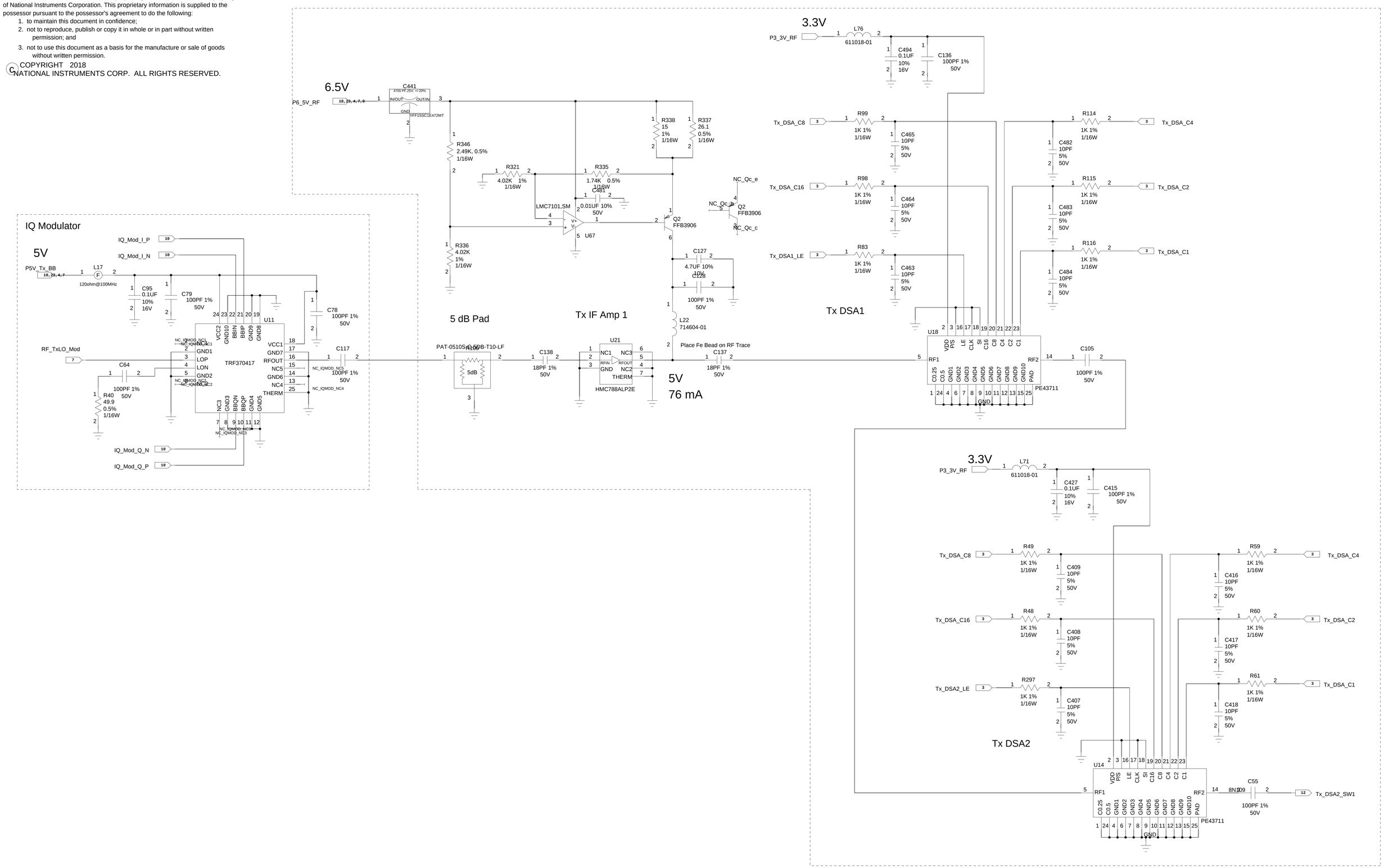

Tx IQ / IF			
N320/N321 6GHz Transceiver			
SIZE C	CODE IDENT NO. 7U296	DRAWING NO. 146456B-01	0
SCALE: NONE		SHEET11 OF 21	

This document contains confidential and proprietary information which is the property of National Instruments Corporation. This proprietary information is supplied to the possessor pursuant to the possessor's agreement to do the following:

1. to maintain this document in confidence;
2. not to reproduce, publish or copy it in whole or in part without written permission; and
3. not to use this document as a basis for the manufacture or sale of goods without written permission.

© COPYRIGHT 2018
NATIONAL INSTRUMENTS CORP. ALL RIGHTS RESERVED.

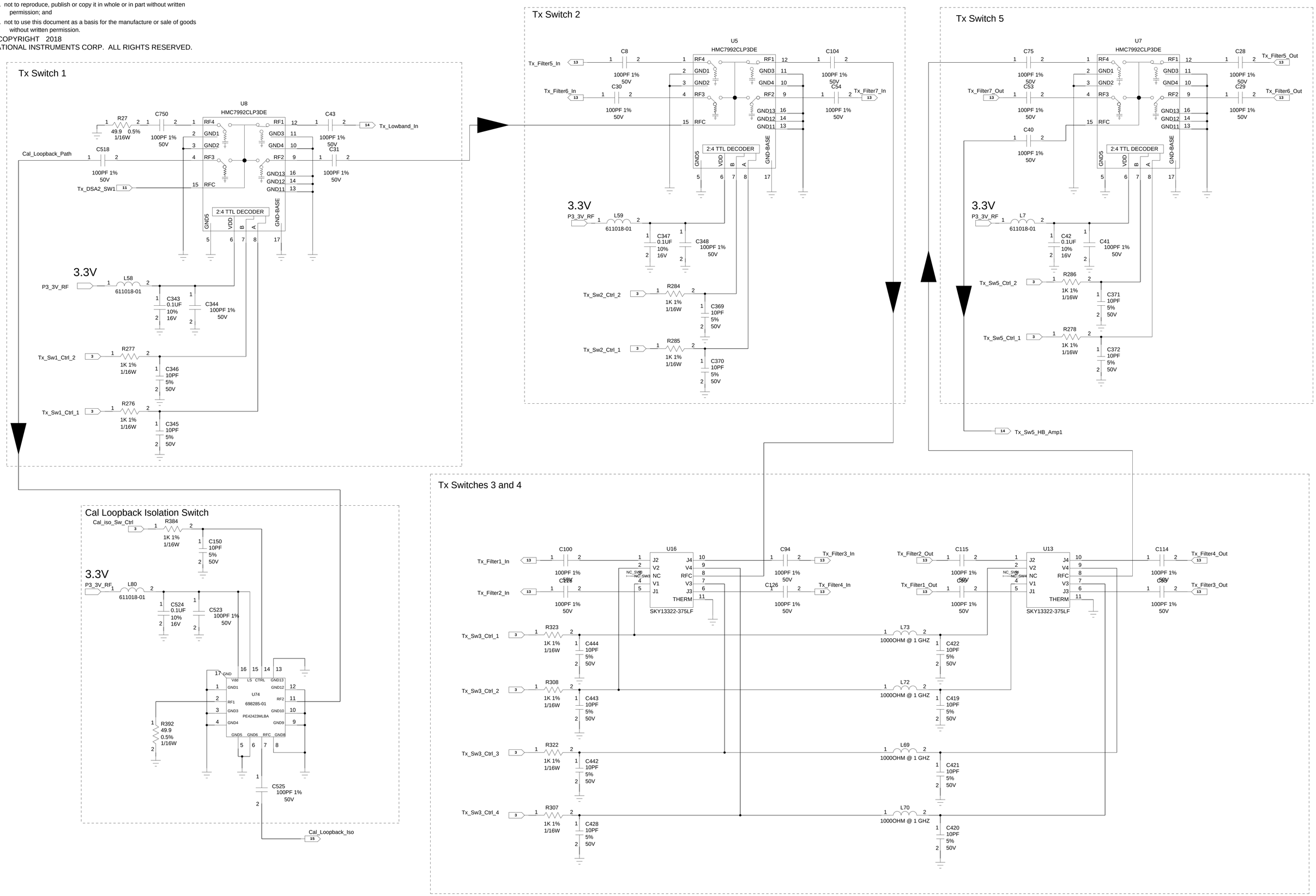

Tx Filter Switches			
N320/N321 6GHz Transceiver			
SIZE C	CODE IDENT NO. 7U296	DRAWING NO. 146456B-01	0
SCALE: NONE		SHEET12 OF 21	

This document contains confidential and proprietary information which is the property of National Instruments Corporation. This proprietary information is supplied to the possessor pursuant to the possessor's agreement to do the following:

1. to maintain this document in confidence;
2. not to reproduce, publish or copy it in whole or in part without written permission; and
3. not to use this document as a basis for the manufacture or sale of goods without written permission.

© COPYRIGHT 2018
NATIONAL INSTRUMENTS CORP. ALL RIGHTS RESERVED.

Tx Filter 1
450 MHz - 650 MHz

3 dB Pad

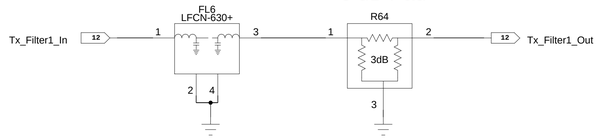

Tx Filter 2
650 MHz - 1 GHz

3 dB Pad

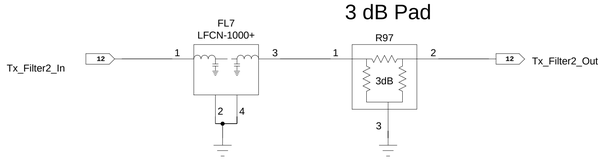

Tx Filter 3
1 GHz - 1.35 GHz

3 dB Pad

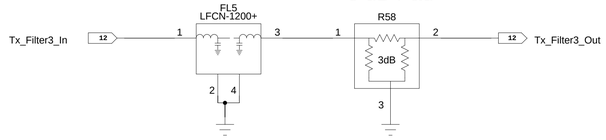

Tx Filter 4
1.35 GHz - 1.9 GHz

3 dB Pad

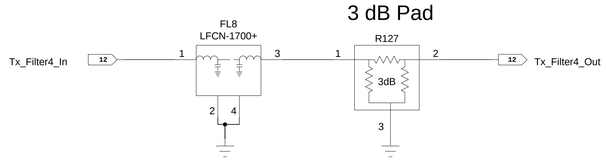

Tx Filter 5
1.9 GHz - 3.0 GHz

3 dB Pad

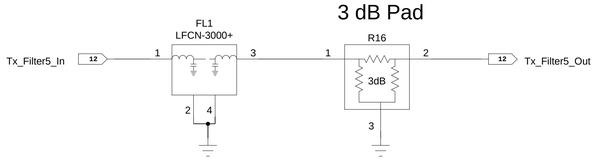

Tx Filter 6
3.0 GHz - 4.1 GHz

4 dB Pad

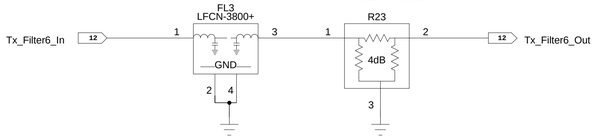

Tx Filter 7
4.1 GHz - 6 GHz

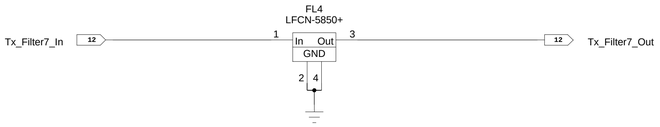

Tx Filters			
N320/N321 6GHz Transceiver			
SIZE C	CODE IDENT NO. 7U296	DRAWING NO. 146456B-01	0
SCALE: NONE		SHEET13 OF 21	

This document contains confidential and proprietary information which is the property of National Instruments Corporation. This proprietary information is supplied to the possessor pursuant to the possessor's agreement to do the following:

1. to maintain this document in confidence;
2. not to reproduce, publish or copy it in whole or in part without written permission; and
3. not to use this document as a basis for the manufacture or sale of goods without written permission.

© COPYRIGHT 2018
NATIONAL INSTRUMENTS CORP. ALL RIGHTS RESERVED.

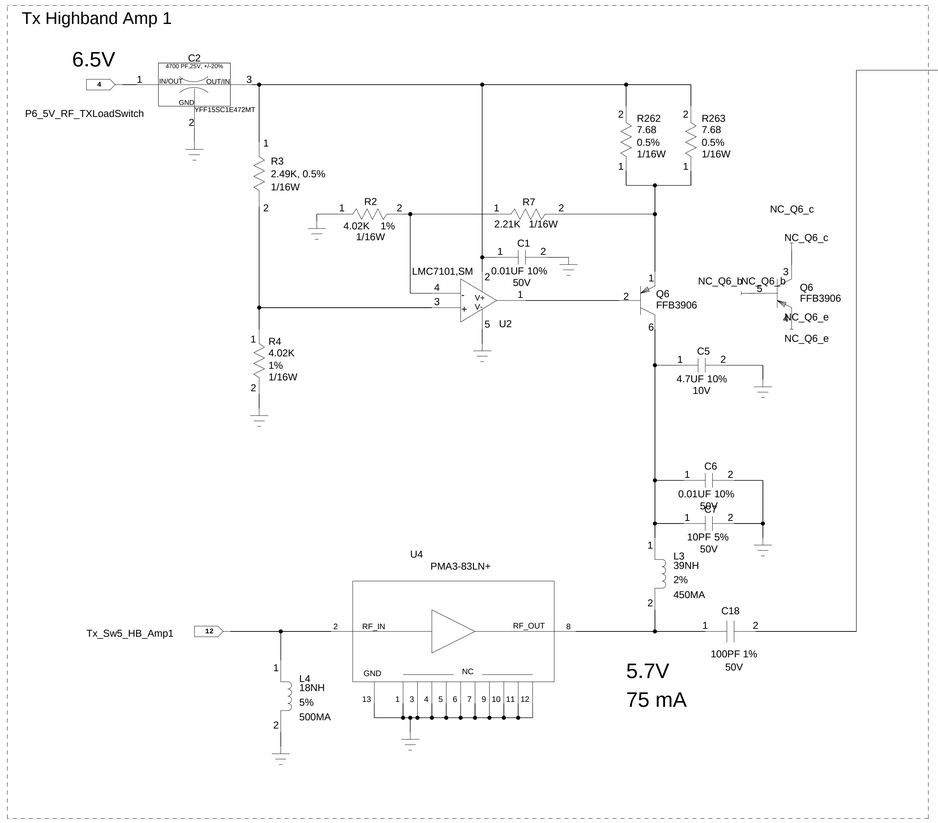

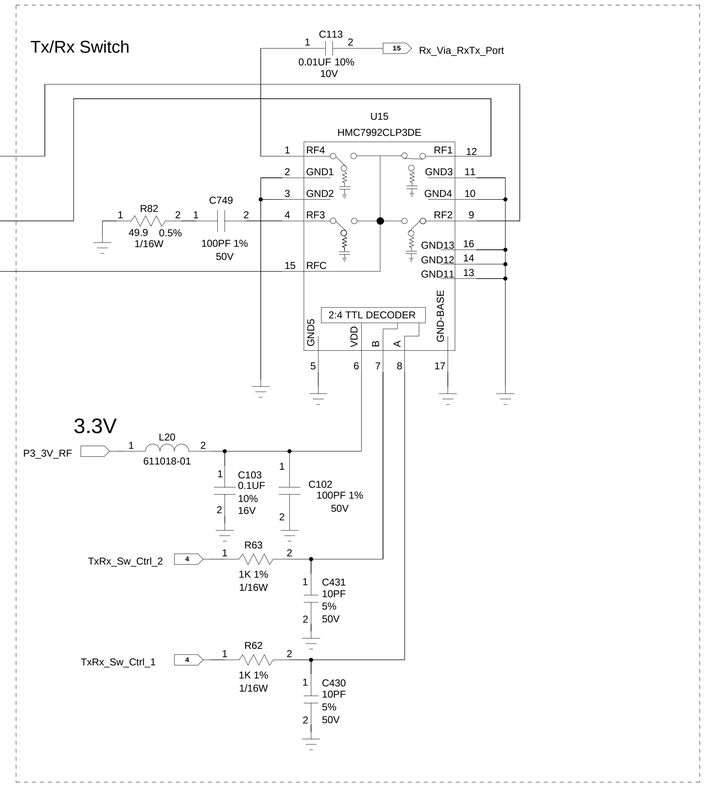

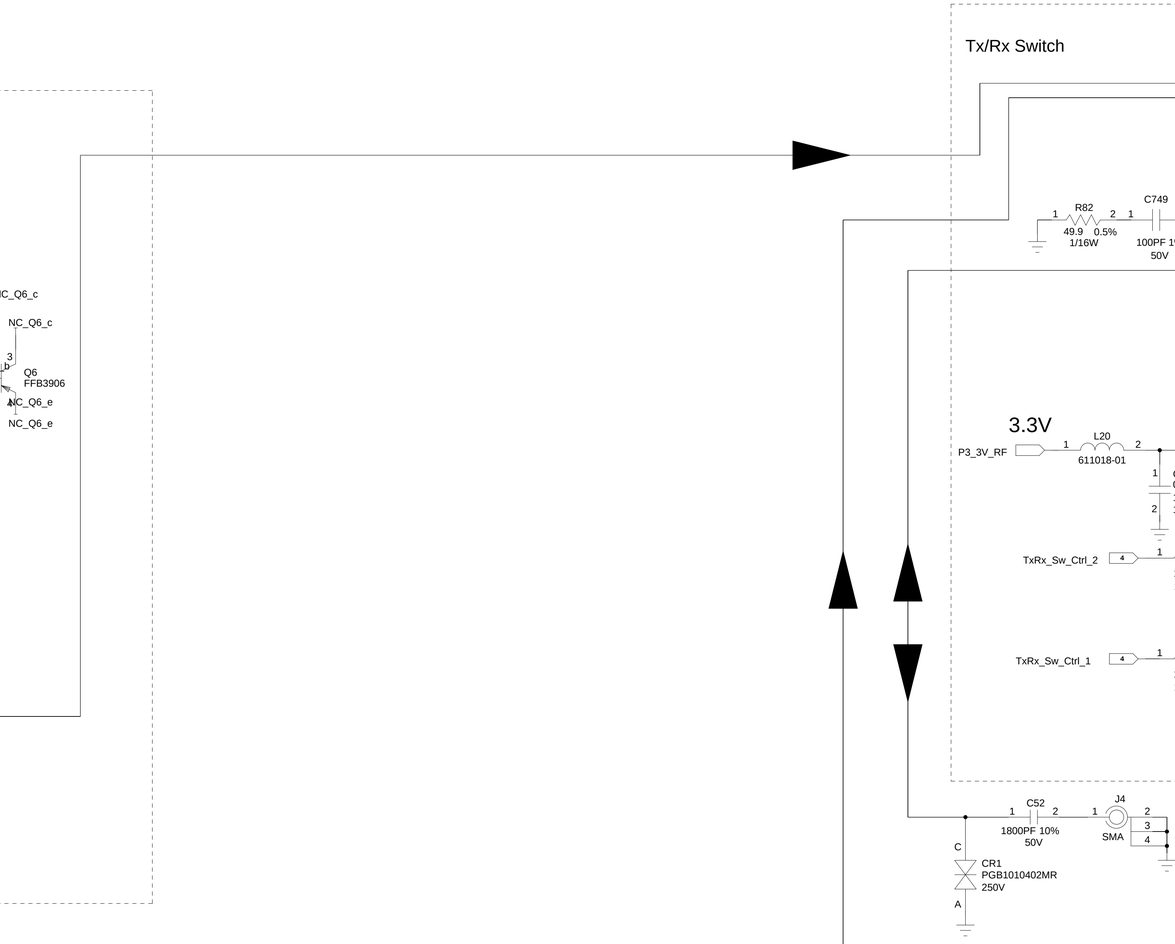

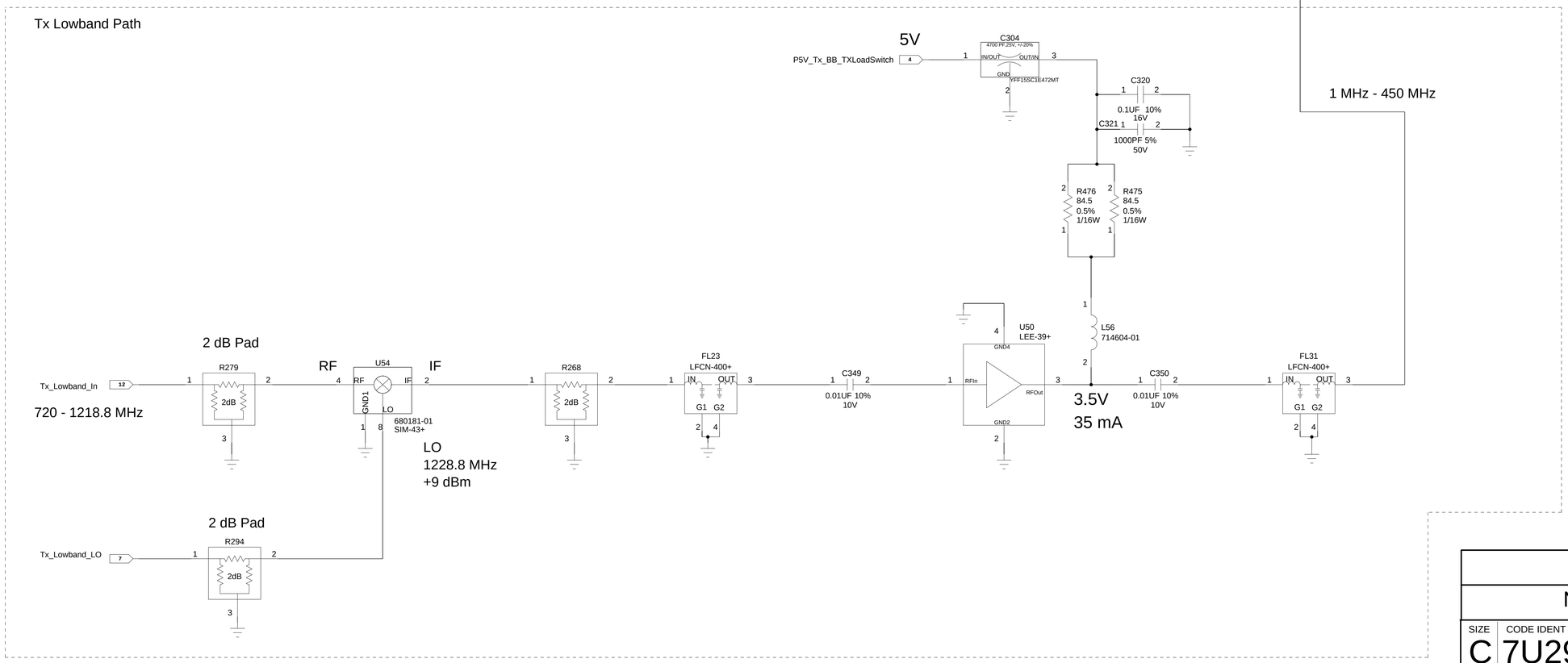

Tx Output / Lowband			
N320/N321 6GHz Transceiver			
SIZE C	CODE IDENT NO. 7U296	DRAWING NO. 146456B-01	0
SCALE: NONE		SHEET14 OF 21	

This document contains confidential and proprietary information which is the property of National Instruments Corporation. This proprietary information is supplied to the possessor pursuant to the possessor's agreement to do the following:

1. to maintain this document in confidence;
2. not to reproduce, publish or copy it in whole or in part without written permission; and
3. not to use this document as a basis for the manufacture or sale of goods without written permission.

© COPYRIGHT 2018
NATIONAL INSTRUMENTS CORP. ALL RIGHTS RESERVED.

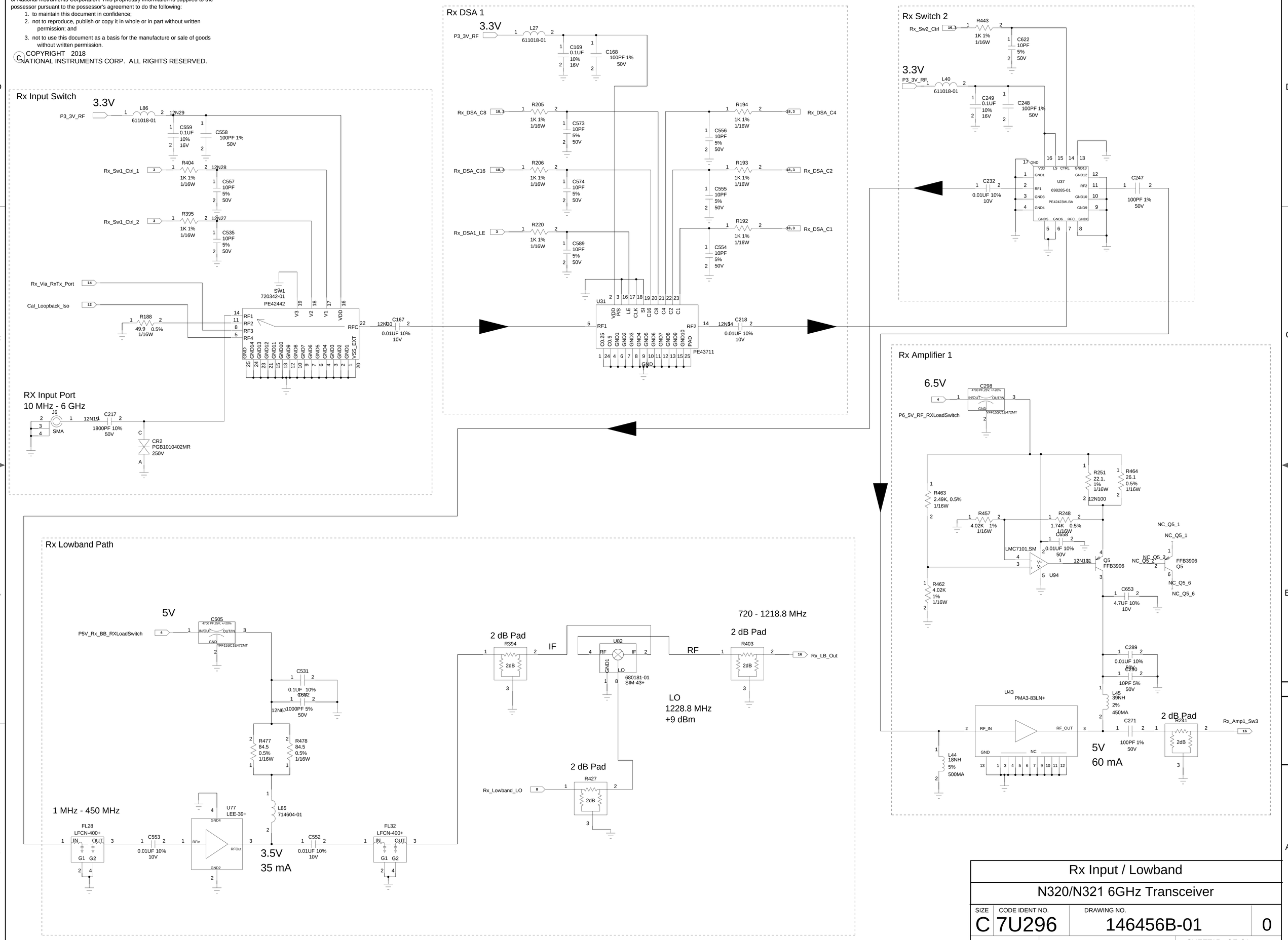

Rx Input / Lowband			
N320/N321 6GHz Transceiver			
SIZE C	CODE IDENT NO. 7U296	DRAWING NO. 146456B-01	0
SCALE: NONE		SHEET15 OF 21	

This document contains confidential and proprietary information which is the property of National Instruments Corporation. This proprietary information is supplied to the possessor pursuant to the possessor's agreement to do the following:

1. to maintain this document in confidence;
2. not to reproduce, publish or copy it in whole or in part without written permission; and
3. not to use this document as a basis for the manufacture or sale of goods without written permission.

© COPYRIGHT 2018
NATIONAL INSTRUMENTS CORP. ALL RIGHTS RESERVED.

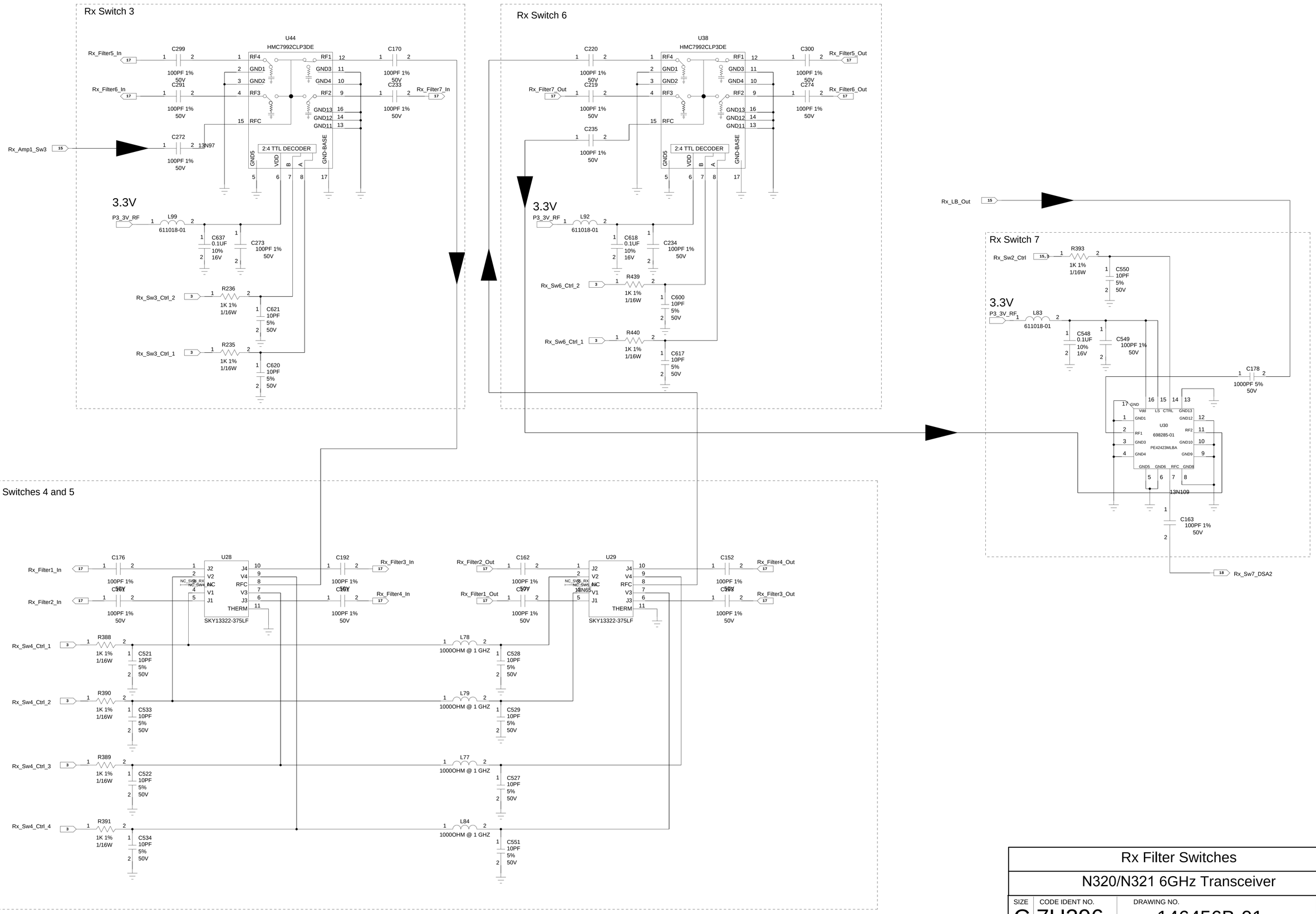

Rx Filter Switches			
N320/N321 6GHz Transceiver			
SIZE C	CODE IDENT NO. 7U296	DRAWING NO. 146456B-01	0
SCALE: NONE		SHEET16 OF 21	

This document contains confidential and proprietary information which is the property of National Instruments Corporation. This proprietary information is supplied to the possessor pursuant to the possessor's agreement to do the following:

1. to maintain this document in confidence;
2. not to reproduce, publish or copy it in whole or in part without written permission; and
3. not to use this document as a basis for the manufacture or sale of goods without written permission.

© COPYRIGHT 2018
NATIONAL INSTRUMENTS CORP. ALL RIGHTS RESERVED.

Rx Filter 1
450 MHz - 760 MHz

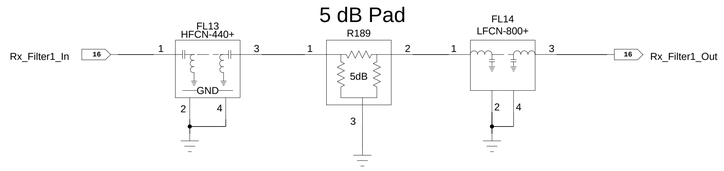

Rx Filter 2
760 MHz - 1.1 GHz

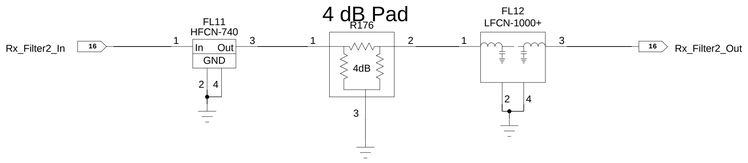

Rx Filter 3
1.1 GHz - 1.41 GHz

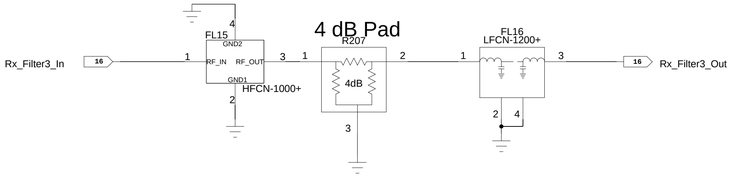

Rx Filter 4
1.41 GHz - 2.05 GHz

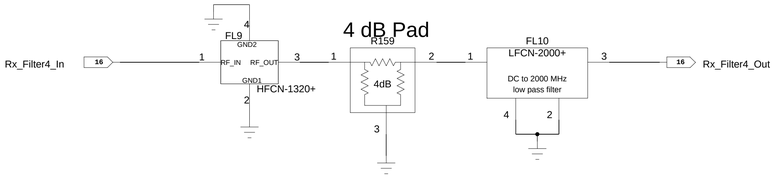

Rx Filter 5
2.05 GHz - 3.0 GHz

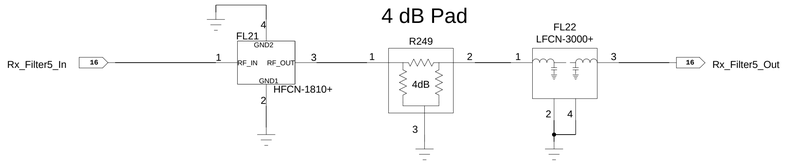

Rx Filter 6
3.0 GHz - 4.5 GHz

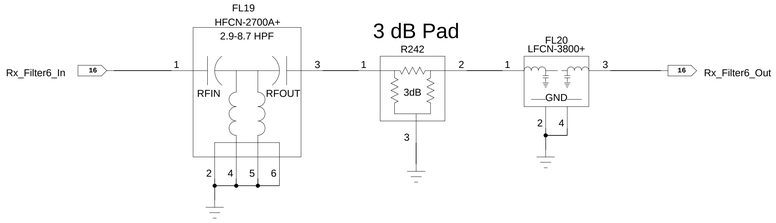

Rx Filter 7
4.5 GHz - 6 GHz

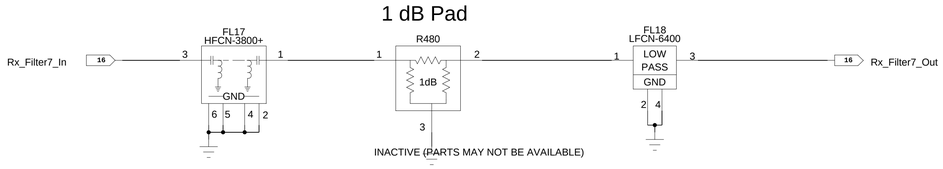

Rx Filters			
N320/N321 6GHz Transceiver			
SIZE C	CODE IDENT NO. 7U296	DRAWING NO. 146456B-01	0
SCALE: NONE		SHEET17 OF 21	

This document contains confidential and proprietary information which is the property of National Instruments Corporation. This proprietary information is supplied to the possessor pursuant to the possessor's agreement to do the following:

1. to maintain this document in confidence;
2. not to reproduce, publish or copy it in whole or in part without written permission; and
3. not to use this document as a basis for the manufacture or sale of goods without written permission.

© COPYRIGHT 2018
NATIONAL INSTRUMENTS CORP. ALL RIGHTS RESERVED.

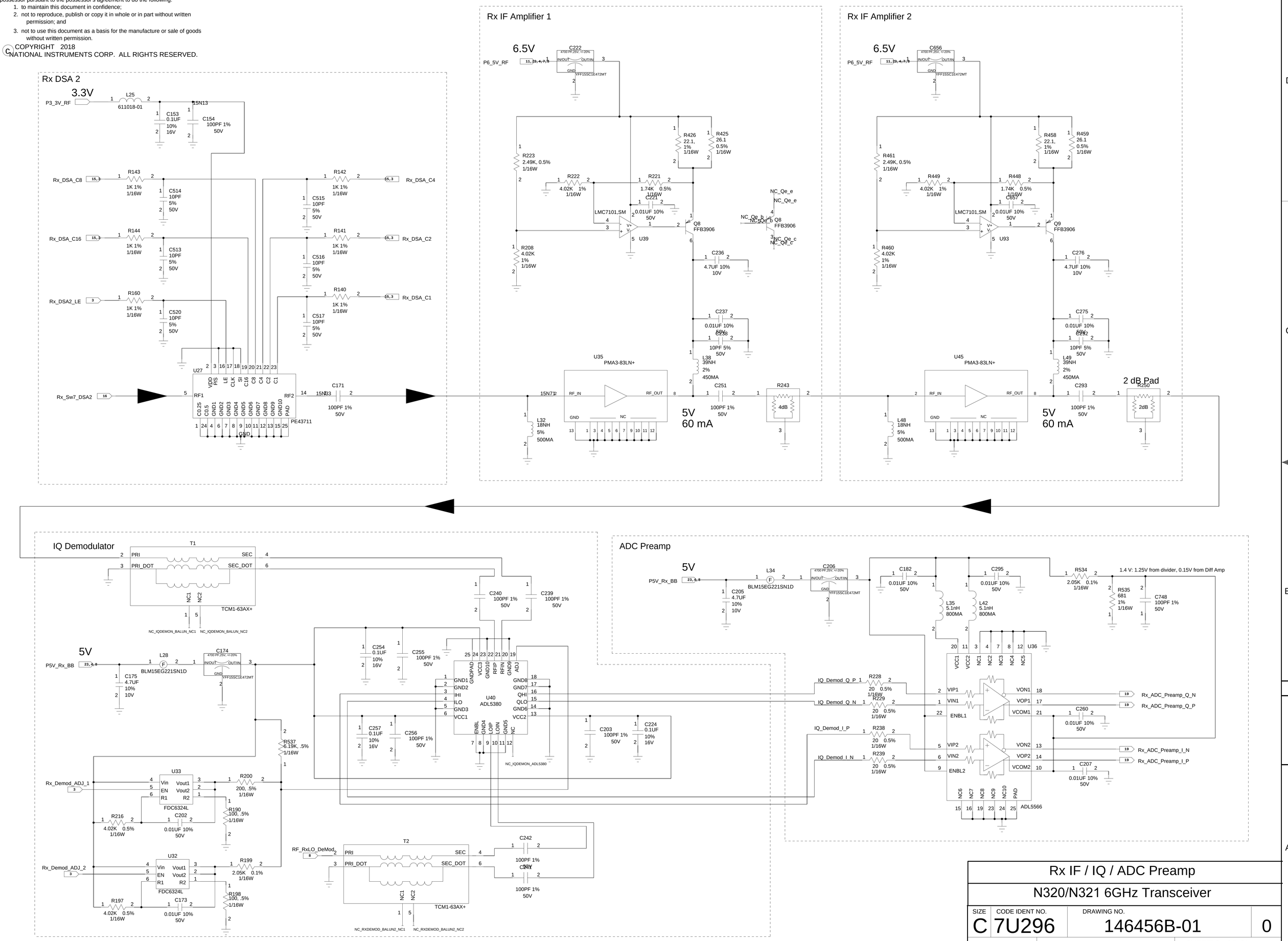

Rx IF / IQ / ADC Preamp		
N320/N321 6GHz Transceiver		
SIZE C	CODE IDENT NO. 7U296	DRAWING NO. 146456B-01 — 0
SCALE: NONE		SHEET18 OF 21

This document contains confidential and proprietary information which is the property of National Instruments Corporation. This proprietary information is supplied to the possessor pursuant to the possessor's agreement to do the following:

1. to maintain this document in confidence;
2. not to reproduce, publish or copy it in whole or in part without written permission; and
3. not to use this document as a basis for the manufacture or sale of goods without written permission.

© COPYRIGHT 2018
NATIONAL INSTRUMENTS CORP. ALL RIGHTS RESERVED.

Anti Alias Filters

150 MHz BW

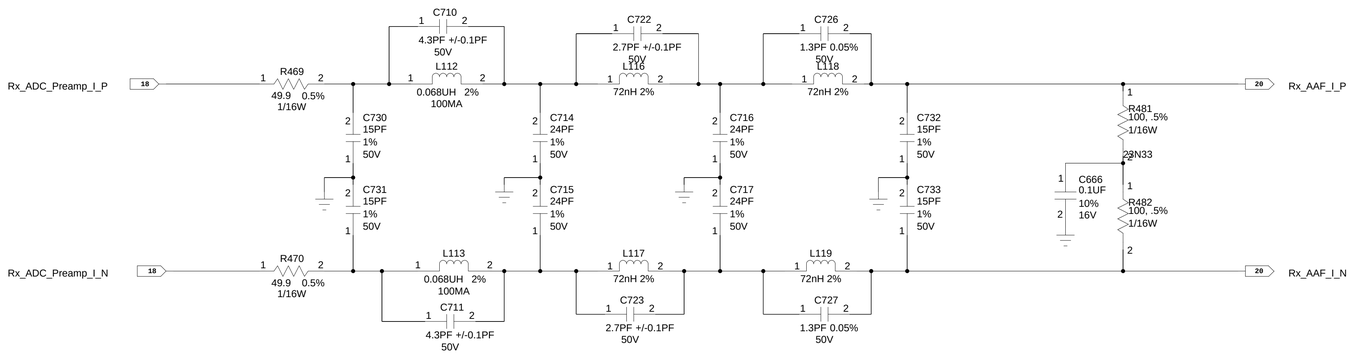

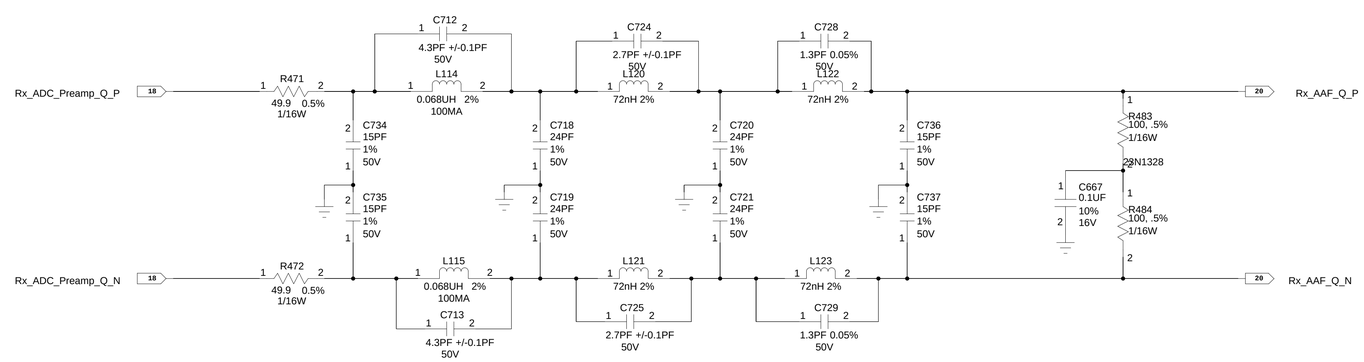

Rx Anti Alias Filter			
N320/N321 6GHz Transceiver			
SIZE C	CODE IDENT NO. 7U296	DRAWING NO. 146456B-01	0
SCALE: NONE		SHEET19 OF 22	

This document contains confidential and proprietary information which is the property of National Instruments Corporation. This proprietary information is supplied to the possessor pursuant to the possessor's agreement to do the following:

1. to maintain this document in confidence;
2. not to reproduce, publish or copy it in whole or in part without written permission; and
3. not to use this document as a basis for the manufacture or sale of goods without written permission.

© COPYRIGHT 2018
NATIONAL INSTRUMENTS CORP. ALL RIGHTS RESERVED.

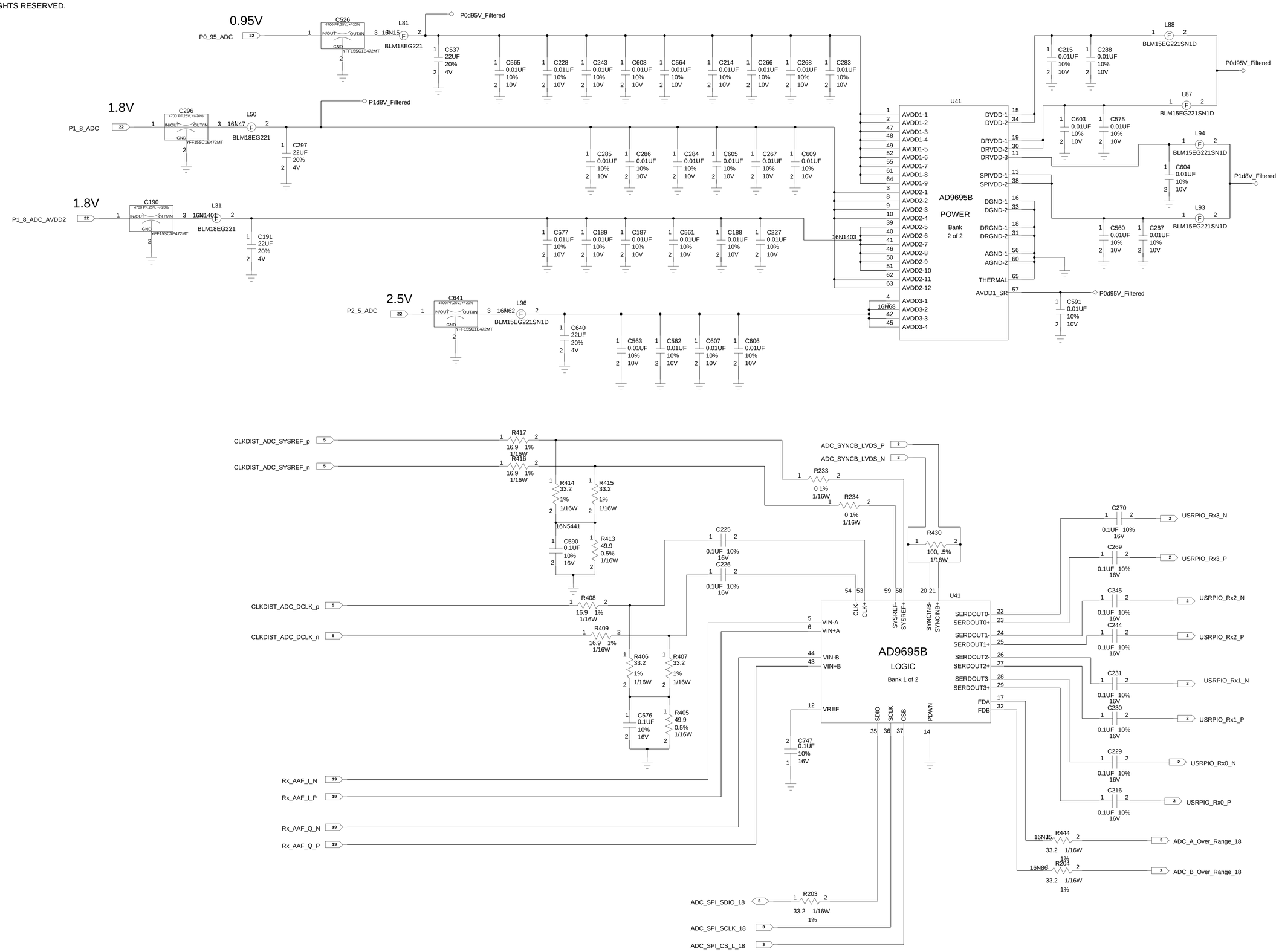

Rx ADC

N320/N321 6GHz Transceiver

SIZE	CODE IDENT NO.	DRAWING NO.	
C	7U296	146456B-01	0
SCALE: NONE		SHEET20 OF 21	

This document contains confidential and proprietary information which is the property of National Instruments Corporation. This proprietary information is supplied to the possessor pursuant to the possessor's agreement to do the following:
1. to maintain this document in confidence;
2. not to reproduce, permission; and
3. not to use this doc without written p
© COPYRIGHT 20 NATIONAL INSTRU

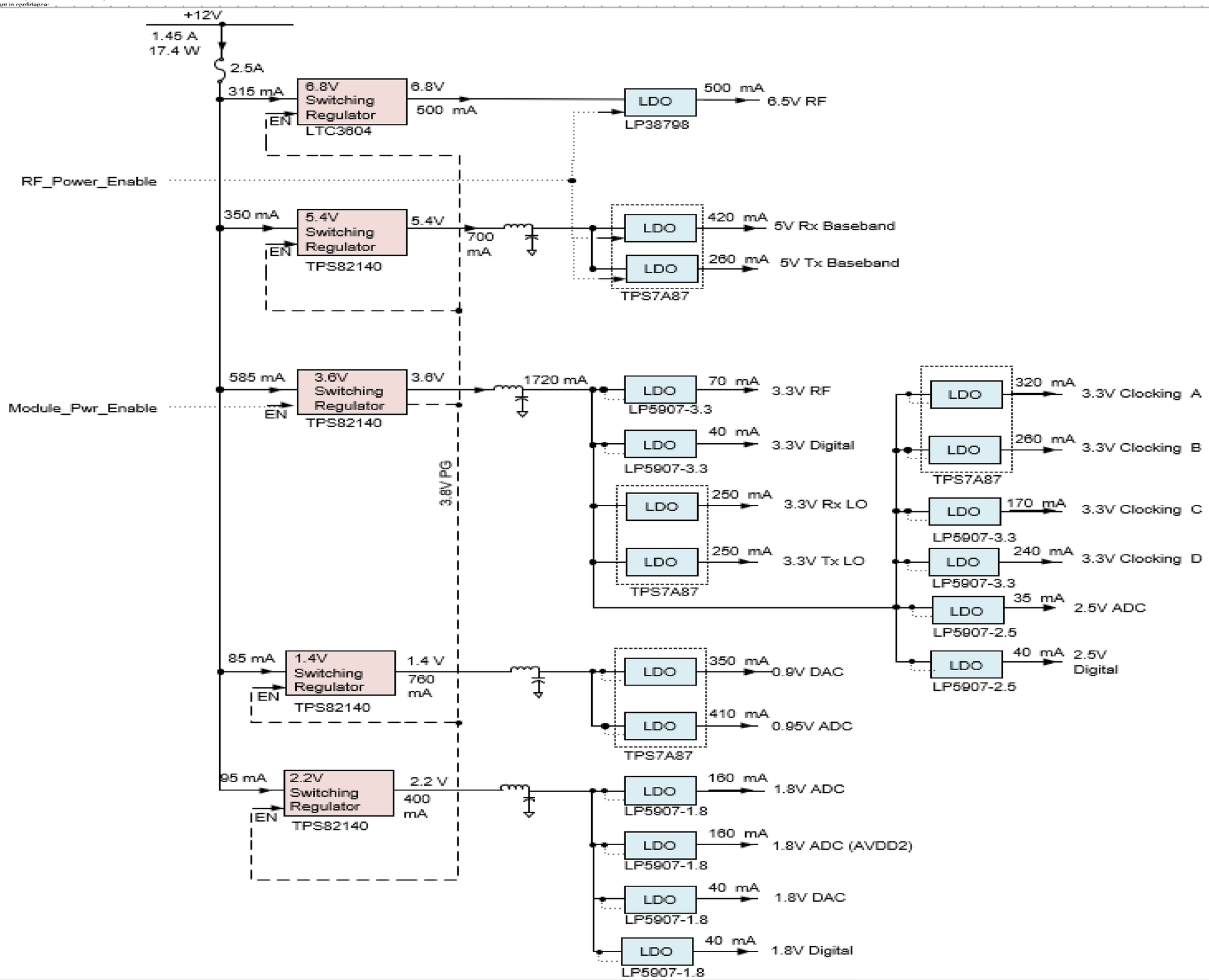

Pwr Supply Blk Diag			
N320/N321 6GHz Transceiver			
SIZE C	CODE IDENT NO. 7U296	DRAWING NO. 146456B-01	0
SCALE: NONE		SHEET21 OF 21	

This document contains confidential and proprietary information which is the property of National Instruments Corporation. This proprietary information is supplied to the possessor pursuant to the possessor's agreement to do the following:
1. to maintain this document in confidence;
2. not to reproduce, publish or copy it in whole or in part without written permission; and
3. not to use this document as a basis for the manufacture or sale of goods without written permission.

© COPYRIGHT 2018
NATIONAL INSTRUMENTS CORP. ALL RIGHTS RESERVED.

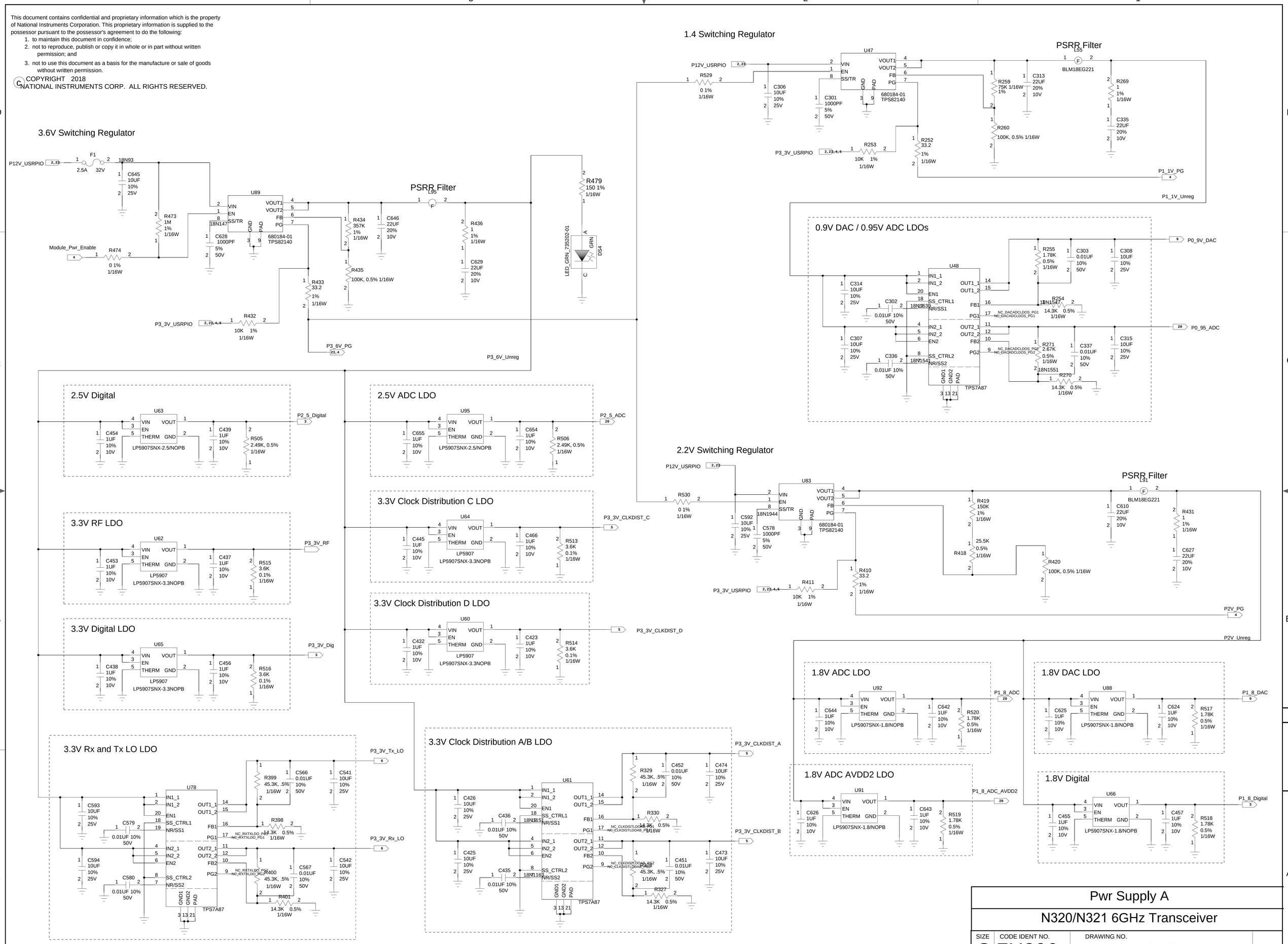

Pwr Supply A			
N320/N321 6GHz Transceiver			
SIZE C	CODE IDENT NO. 7U296	DRAWING NO. 146456B-01	0
SCALE: NONE		SHEET22 OF 21	

This document contains confidential and proprietary information which is the property of National Instruments Corporation. This proprietary information is supplied to the possessor pursuant to the possessor's agreement to do the following:

1. to maintain this document in confidence;
2. not to reproduce, publish or copy it in whole or in part without written permission; and
3. not to use this document as a basis for the manufacture or sale of goods without written permission.

© COPYRIGHT 2018
NATIONAL INSTRUMENTS CORP. ALL RIGHTS RESERVED.

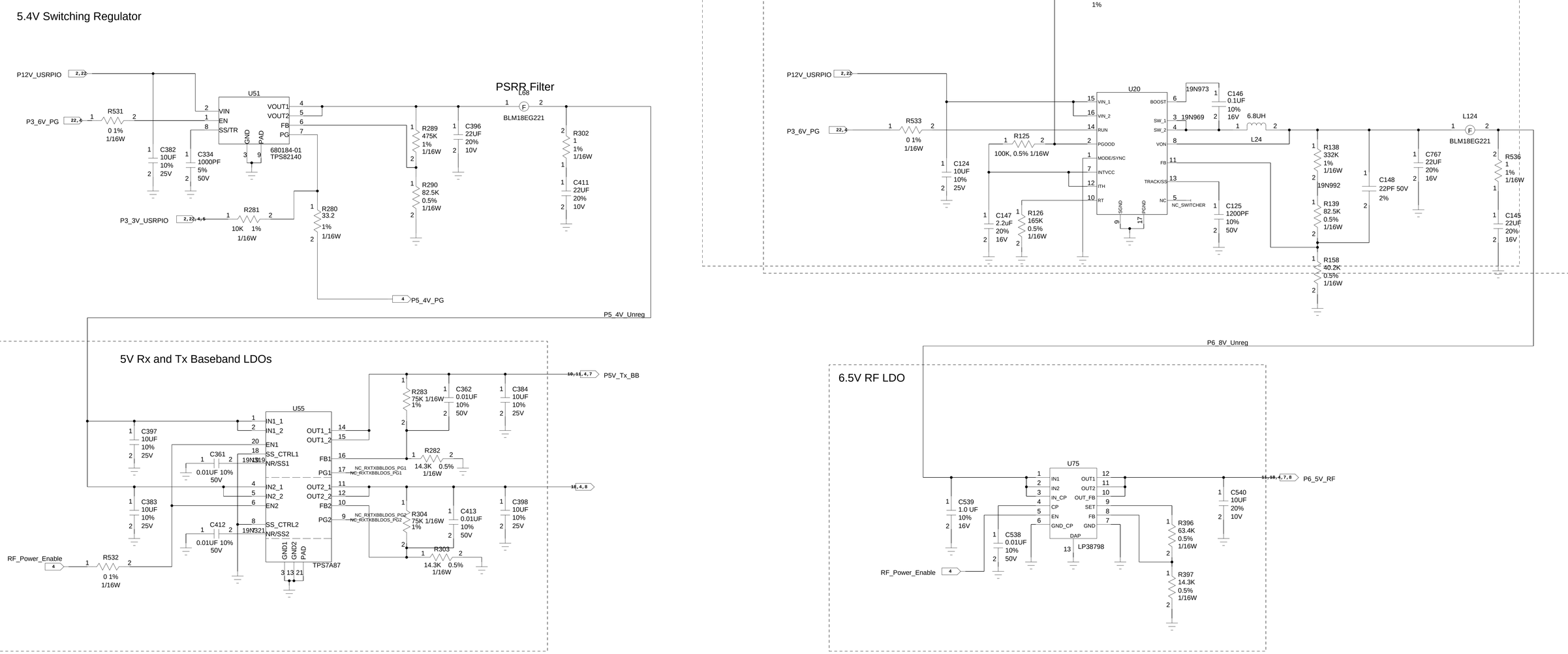

Pwr Supply B			
N320/N321 6GHz Transceiver			
SIZE C	CODE IDENT NO. 7U296	DRAWING NO. 146456B-01	0
SCALE: NONE		SHEET23 OF 21	